Published: 11-May-2011

Module Communications Network -

Torque Specifications

Description	Nm	lb-ft
Central junction box bracket retaining nuts	10	7
Central junction box bracket retaining bolts	25	18
Engine compartment ground cable nuts	25	18
Body panel ground cable nuts	25	18
Vehicles with auxiliary heating - Heater pipes to body panel nut	10	7
Wiring harness to plenum chamber nuts	4	3
Vehicles with auxiliary climate control - A/C lines to body panel nut	10	7
Battery ground cable to body nut	25	18
Battery junction box retaining bolt	6	4
Ground cables to the lower A-pillar nut	10	7
Battery positive cable to the battery junction box (BJB) nut	25	18

mcx30.com

Published: 11-May-2011

Module Communications Network - Communications Network

Diagnosis and Testing

Principles of Operation

For a detailed description of the Communications Network, refer to the relevant Description and Operation section in the workshop manual. REFER to: Communications Network (418-00 Module Communications Network, Description and Operation).

Inspection and Verification

CAUTION: Diagnosis by substitution from a donor vehicle is **NOT** acceptable. Substitution of control modules does not guarantee confirmation of a fault, and may also cause additional faults in the vehicle being tested and/or the donor vehicle.

- NOTE: Check and rectify basic faults before beginning diagnostic routines involving pinpoint tests.

1. **1.** Verify the customer concern.
2. **2.** Visually inspect for obvious signs of damage and system integrity.

Visual Inspection

Electrical
• Fuses (refer to electrical guide) • Wiring harness • Correct engagement of electrical connectors • Loose or corroded connections • Routing of fibre optic harnesses • Correct engagement of optical connectors • Correct placement of optical connectors (ring order) • Correct assembly of optical connectors (backout, etc) • Damage to fibre (chafing, abrasion, kinking, cuts, etc)

3. **3.** If an obvious cause for an observed or reported concern is found, correct the cause (if possible) before proceeding to the next step.
4. **4.** If the cause is not visually evident, check for Diagnostic Trouble Codes (DTCs) and refer to the DTC Index.

CAN Network Integrity Checks

In the event that one or more control modules are not communicating on either the Medium Speed (MS) or High Speed (HS) CAN Buses, checks can be performed to confirm the integrity of the CAN harness.

The following information is applicable to HS and MS CAN Buses accessible via the J1962 diagnostic connector.

Module Connections to the CAN Harness

Modules are connected to the CAN harness either in a 'loop' or 'spur' configuration. In the 'loop' type configuration the CAN harness loops into the module (via two connector pins) and then loops out of the module (via another two connector pins). In the 'spur' type configuration, a harness spur is spliced into the main 'backbone' of the CAN harness and the module is connected to the harness spur via two connector pins.

CAN Harness Architecture

For a detailed description of the CAN Networks and architecture, refer to the relevant Description and Operation section in the Workshop Manual.
REFER to: Communications Network (418-00 Module Communications Network, Description and Operation).

IDS Vehicle Integrity Test

If a control module is suspected of non-communication, the Network Integrity test application available on the manufacturer approved diagnostic system can be used to confirm if communication is possible between the control modules on the vehicle and the manufacturer approved diagnostic system (via the J1962 diagnostic connector). The results from the test can be used to determine if either a single module or multiple modules are failing to communicate.

CAN Terminating Modules

If the Network Integrity test indicates that one or more module on one of the CAN networks (HS or MS) are failing to communicate, there are several checks that can be made. The first step is to identify if both of the CAN terminating modules on each individual CAN Bus are communicating. If both CAN terminating modules for each individual CAN Bus are communicating (identified via the Network Integrity test), then it can be confirmed that the main 'backbone' of the CAN harness is complete. The main 'backbone' of the CAN harness consists of all the modules connected to the CAN harness via a 'loop' configuration and also includes the two terminating modules.

Communication with both CAN terminating modules via the Network Integrity test confirms the physical integrity of the main 'backbone' of the CAN harness (and the harness spur to the J1962 diagnostic connector). This means that there is no requirement to check the resistance of the CAN Network. This is because the standard check for 60 ohms across the CAN High and CAN Low lines will not provide any additional information regarding the physical condition of the CAN harness, beyond what has already been determined from the Network Integrity test.

Non-Communication of a Terminating Module

If a Network Integrity test reveals a terminating module is failing to communicate it can indicate a break in the main 'backbone' of the CAN harness. The first checks should always be to confirm the power and ground supplies to the non-communicating module are correct. Providing these are correct, the resistance between the CAN High and CAN Low lines at the J1962 connector can be checked to determine the integrity of the main 'backbone' of the CAN harness. After disconnecting the battery a reading of 120 ohms would indicate an open circuit in the main 'backbone' of the CAN harness. Alternatively, a reading of 60 ohms would indicate that there is no open circuit fault with the main 'backbone' of the CAN harness.

It is worth noting that even if one of the terminating modules is disconnected from the CAN harness, communications between the modules still connected may still be possible. Therefore communication between the manufacturer approved diagnostic system and the connected modules may also be possible.

Locating CAN Harness Open Circuits

In the case where multiple modules, including a terminating module, are failing to communicate, having first confirmed the power and ground supplies are correct, the approximate location of the open circuit can be identified from analysis of the Network Integrity test results and reference to the relevant CAN network circuit diagrams. For example, if an open circuit existed in a certain position on the CAN harness, any module positioned on the Network between the J1962 connector and the open circuit should return a response during the Network Integrity test. No responses would be returned from any modules past the open circuit fault in the Network.

CAN Harness 'Spur' Type Configuration Circuits

If, after the initial checks (Network Integrity test using the manufacturer approved diagnostic system, and power and ground supplies to the module have been checked and confirmed as correct), a module that is connected to the CAN harness via a 'spur' type configuration is suspected of not communicating, then the physical integrity of the CAN harness 'spur' can be checked.

This is most easily undertaken by individually checking the continuity of the CAN High and CAN Low lines between the non-communicating module connector (with the module disconnected) and the J1962 diagnostic connector.

'Lost Communications' DTCs

As well as the methods described so far in this document, which can be used to determine the location of an open circuit in the CAN harness, 'Lost Communications' DTCs can also be used for this purpose. Lost communication DTCs mean that a module is not receiving CAN information from another module.

For example, if a global DTC read were to be carried out, only DTCs stored in the modules that the manufacturer approved diagnostic system could communicate with would be displayed. If there was an open circuit fault in a certain position on the CAN harness, the modules that could display DTCs would all be prior to the open circuit on the Network, and these modules should display 'Lost Communications' DTCs with all the modules located on the Network past the open circuit fault.

'Bus off' DTCs

The references to bus and its condition refer to the network concerned and the modules on that network.

If a module logs a 'Bus Off' DTC, it means that the module has detected CAN transmission errors and has disabled its's own CAN transmissions and disconnected itself from the network in an attempt to allow the rest of the network to function. At this point the 'Bus Off' DTC is set. A common cause of 'Bus Off' DTCs can be a short circuit in the CAN network.

Media oriented systems transport (MOST) diagnosis

Overview

The basic guidelines are covered in the description and operation section, such as not attempting to repair fibre optic cables, but additional precautions include:

- Do not touch the exposed ends of the optical fibres (grease from skin can contaminate the fibre)
- Whenever the fibre optic cable is disconnected, cover the connectors to prevent dust contamination
- Do not expose the fibre optic cable to heat
- Do not bend the fibre optic cable through less than a 25 mm (one inch) radius
- Do not use laser pens to test the fibre optic cable's ability to pass light
  - There is a dedicated tester to use with the MOST network modules and fibre optic harness to assist with diagnosis and to test the fibre optic cable's ability to pass light

MOST tester

Before connecting the tester to the network, turn on the unit and check that the red **power on** indicator is illuminated.

If not, the battery should be replaced before using the tester.

2+0 Self-test

1. **1.** Set the connector selector switch to 2+0.
2. **2.** Select **beep** or **LED** on the tester, depending on your choice of indicator.
3. **3.** Turn the tester on and check the operation of the power indicator.
4. **4.** Using the 2+0 loop-back lead from the kit, push it into the 2+0 connector housing in the tester until it clicks into place.
5. **5.** Press the red **test** button in the center of the tester.
6. **6.** Depending on your choice in step 2, the tester will give either an audible tone or a green light.

- If the tester continues to give a tone or light after the test button is released this does not indicate a fault, only that there is a signal feed-back within the tester which will stop when the loop-back lead is removed.

2+4 Self-test

Carry out the self-test in the same way as for 2+0, but using the 2+4 loop-back lead and select 2+4 on the connector selector switch.

Vehicle diagnosis

CAUTION: Make sure the tester is not connected to the MOST network when either switching the tester on or switching between 2+0 and 2+4, as the tester emits a brief pulse of light which could introduce a fault into the network.

7. **7.** Use the approved diagnostic system or a scan tool to retrieve any DTCs.
8. **8.** Set the connector selector switch to **2+0**.
9. **9.** Disconnect the intermediate fibre optic cable connector and connect the male half to the tester connector at the top of the unit using the adaptor in the kit.
10. **10.** Turn the tester on and check the operation of the power indicator.
11. **11.** Set the **LED/beep** selector to **LED**.
12. **12.** Turn the ignition switch to the **ON** position.
13. **13.** If the green LED is active, a signal has been received indicating that the first half of the optical ring is functioning.
14. **14.** If the green LED is **NOT** active, no signal has been received indicating that the first half of the optical ring is **NOT** functioning.
    - A ring break code should be set as a result of this. Use the approved diagnostic system to trace the fault and clear the code.

DTC Index

For a list of Diagnostic Trouble Codes (DTCs) that could be logged on this vehicle, please refer to Section 100-00.

mcx30.com

Published: 11-May-2011

Module Communications Network - Battery Junction Box (BJB)V6 4.0L Petrol

Removal and Installation

Removal

- NOTE: The BJB is an integral component of the engine compartment wiring harness and cannot be removed separately.

All vehicles

1. Disconnect the battery ground cable.
   For additional information, refer to: Specifications (414-00 Battery and Charging System - General Information, Specifications).
2. Make the SRS system safe.
   For additional information, refer to: Standard Workshop Practices (100-00 General Information, Description and Operation).
3. Remove both inboard ignition coils.
   For additional information, refer to: Ignition Coil (303-07A Engine Ignition - V6 4.0L Petrol, Removal and Installation).
4. Remove the radiator grille.
   For additional information, refer to: Radiator Grille (501-08 Exterior Trim and Ornamentation, Removal and Installation).
5. Remove the air cleaner assembly.
   For additional information, refer to: Air Cleaner (303-12C Intake Air Distribution and Filtering - V6 4.0L Petrol, Removal and Installation).
6. Remove the four-wheel drive control module.
   For additional information, refer to: Four-Wheel Drive (4WD) Control Module (308-07A Four-Wheel Drive Systems, Removal and Installation).
7. Remove the battery tray.
   For additional information, refer to: Battery Tray (414-01 Battery, Mounting and Cables, Removal and Installation).
8. Remove the auxiliary battery tray.
   For additional information, refer to: Auxiliary Battery Tray (414-01 Battery, Mounting and Cables, Removal and Installation).
9. Remove the ECM cover.
   - Disconnect 2 electrical connectors for access.
   - Disconnect the 2 ECM electrical connectors.
   - Remove the 4 Torx screws.

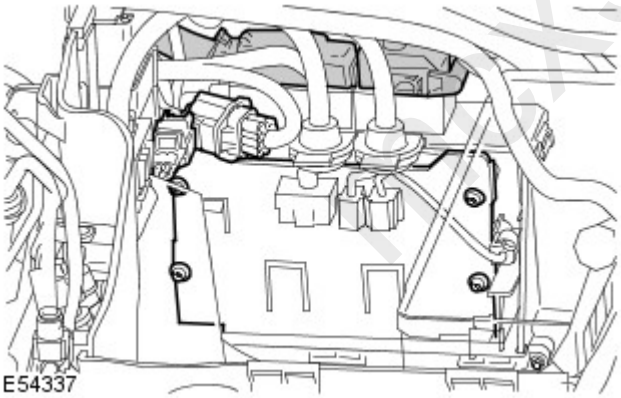
E54337

10. Remove the ECM.
    - Remove the ECM top cover.

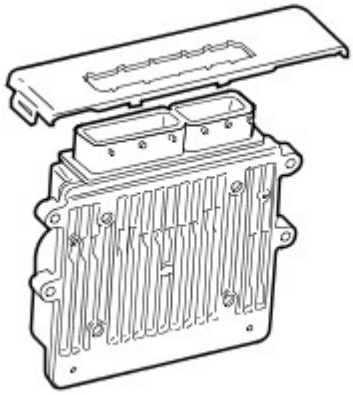
E54338

11. Remove the BJB cover.

- Release the clip.

12. Disconnect the battery positive cable from the BJB.

- Remove the nut.

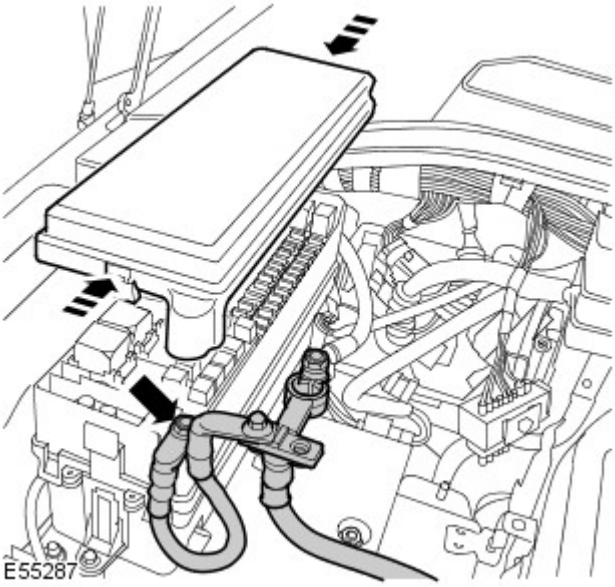

13. Remove both cowl side trim panels.
For additional information, refer to: Cowl Side Trim Panel (501-05 Interior Trim and Ornamentation, Removal and Installation).

14. Remove the CJB.
For additional information, refer to: Central Junction Box (CJB) (418-00 Module Communications Network, Removal and Installation).

15. Release the CJB bracket.

- Release the 3 upper wiring harness clips.
- Remove the 2 bolts.

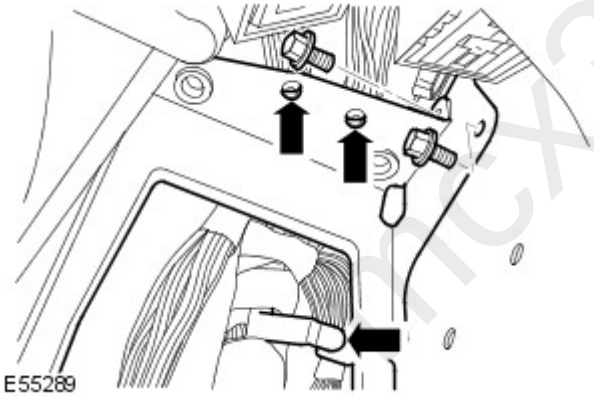

16. Remove the CJB bracket.

- Disconnect the 2 electrical connectors.
- Release the 3 lower wiring harness clips.
- Remove the 2 nuts.

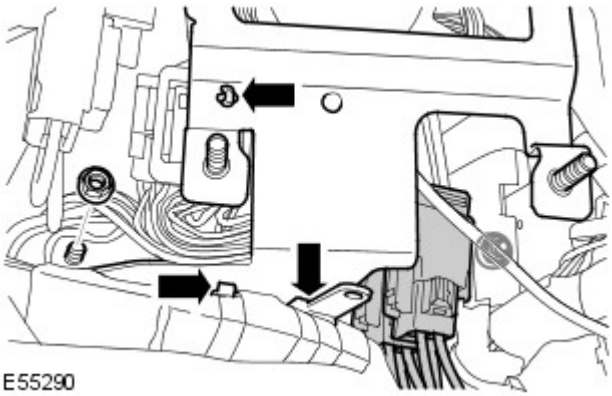

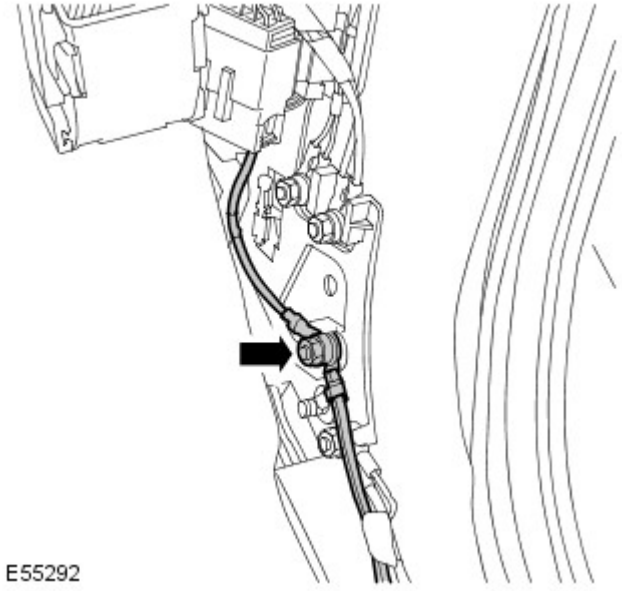

17. Release the 2 ground cables from the lower A-pillar.

- Remove the nut.

18. Disconnect the heater motor electrical connector.

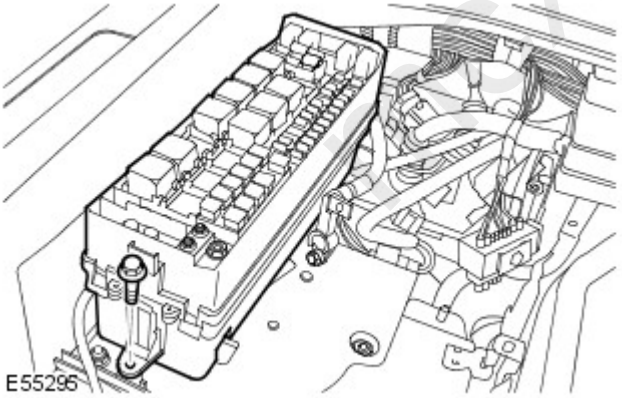

19. Release the BJB from the bracket.

- Remove the bolt.

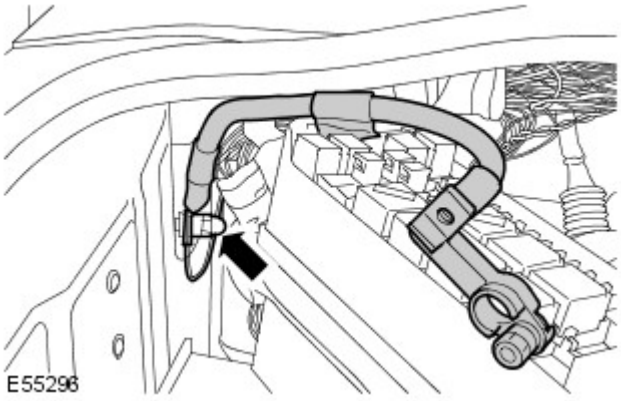

20. Remove the battery ground cable.

- Remove the nut.
- Release the additional ground cable.

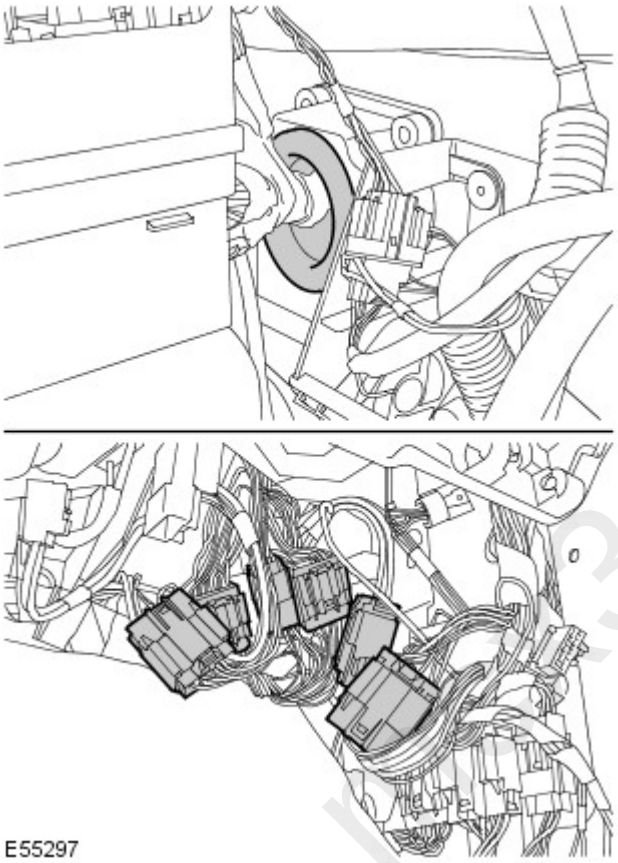

21. Release the BJB wiring harness from the bulkhead.

- Disconnect the 6 electrical connectors.
- Release the grommet.

22. Raise and support the vehicle.

23. Remove both front fender splash shields.
For additional information, refer to: Fender Splash Shield (501-02 Front End Body Panels, Removal and Installation).

24. Remove both headlamps.
For additional information, refer to: Headlamp Assembly (417-01 Exterior Lighting, Removal and Installation).

25. Passenger side: Disconnect the engine wiring harness electrical connector.

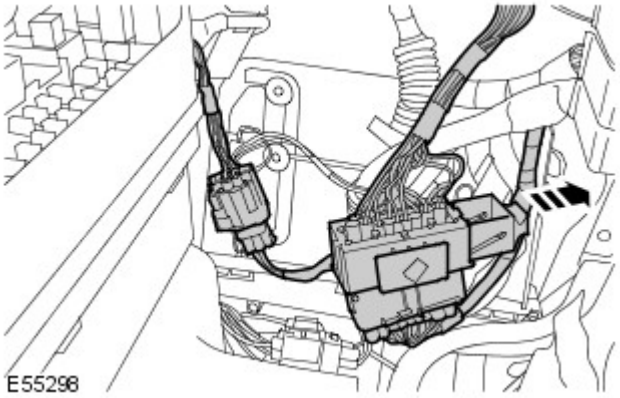

26. Passenger side: Disconnect the transfer case electrical connector.

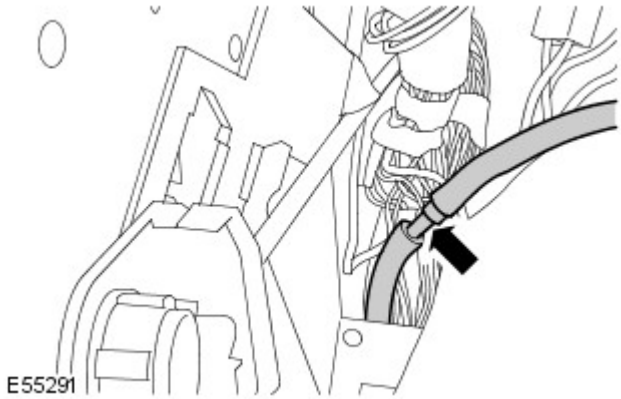

27. LH side: Disconnect the washer jet hose.

28. LH side: Disconnect the adaptive front lighting control module electrical connector.

Vehicles with auxiliary climate control

29. LH side: Release the A/C lines from the body panel.

- Remove the nut.

All vehicles

30. LH side: Disconnect the 3 body panel electrical connectors.

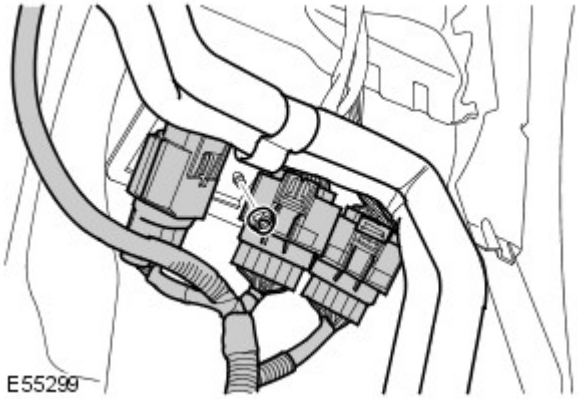

31. LH side: Release the 3 body panel ground cables.

- Remove the nut.

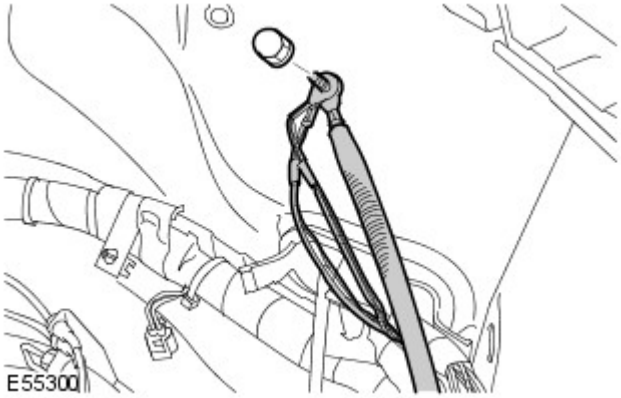

32. LH side: Release the 2 air suspension pipes from the wiring harness.

- Release the 7 clips.

33. LH side: Disconnect the ABS electrical connector.

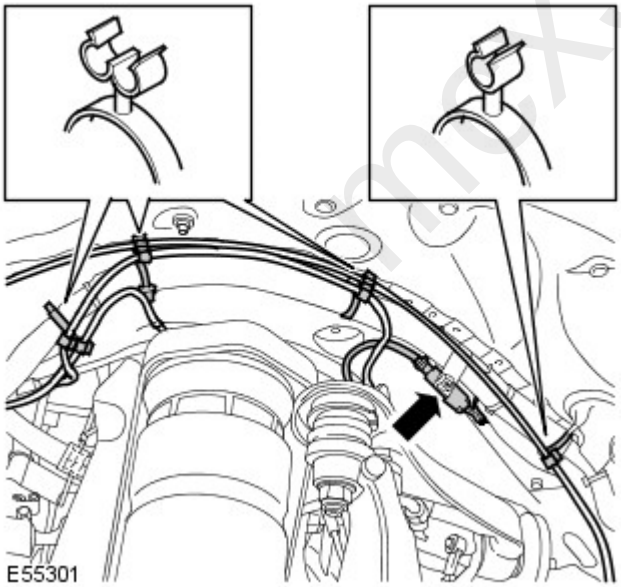

mgx30.com

34. LH side: Release 3 engine compartment ground cables.

- Remove the 3 nuts.
- Release the 2 clips.

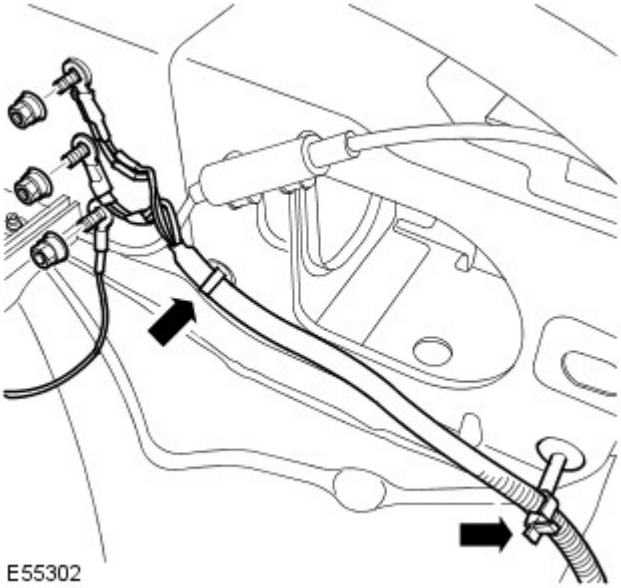

35. LH side: Release the washer reservoir wiring harness.

- Disconnect the 3 electrical connectors.
- Disconnect the 2 washer jet hoses.

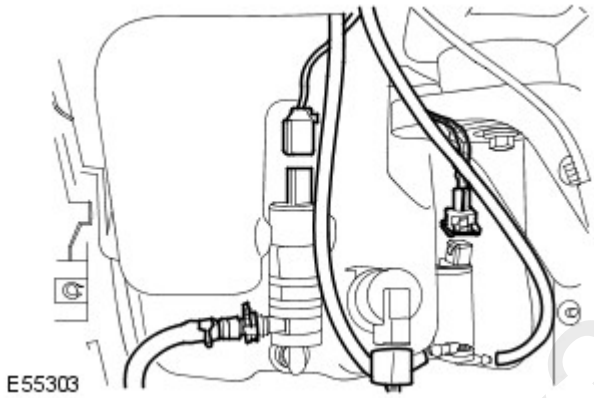

36. LH side: Disconnect the coolant expansion tank level switch electrical connector.

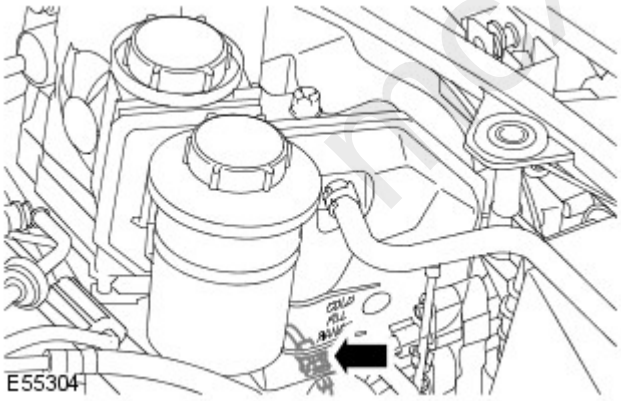

37. LH side: Disconnect the brake pad wear sensor electrical connector.

mdx30.com

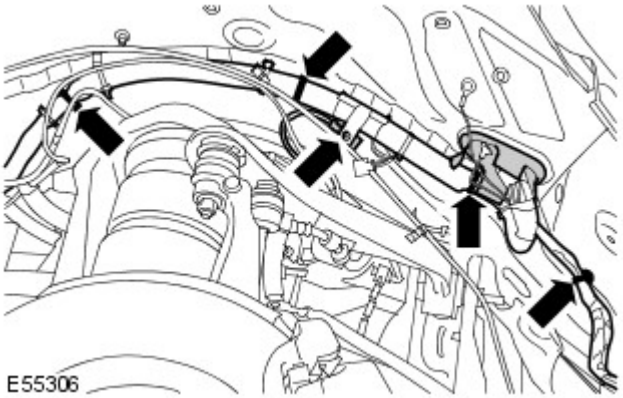

38. LH side: Release the wiring harness.

- Release the grommet.
- Release the 4 clips.

39. Remove the windshield wiper motor.
For additional information, refer to: Windshield Wiper Motor (501-16 Wipers and Washers, Removal and Installation).

40. Remove the hood pad.

- Remove the 11 clips.

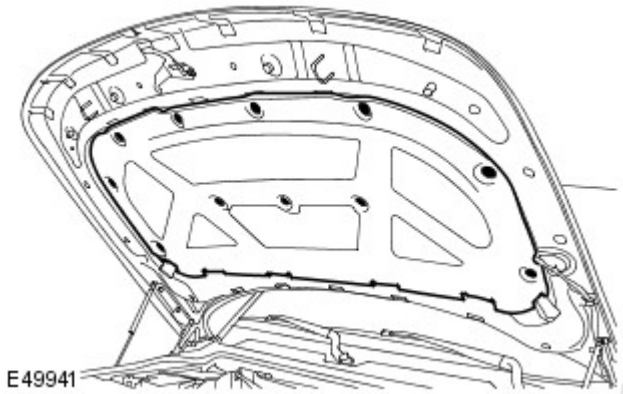

41. Release the hood wiring harness.

- Disconnect the 2 washer jet hoses.
- Disconnect the 2 electrical connectors.
- Release the 10 clips.
- Remove the wiring harness cover.
- Release the grommet.

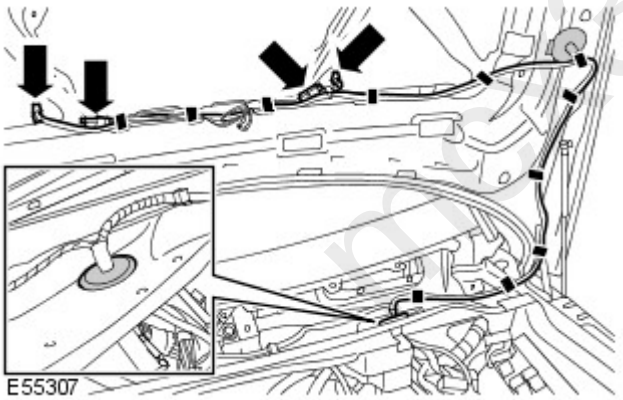

42. Disconnect the brake booster vacuum pump electrical connector.

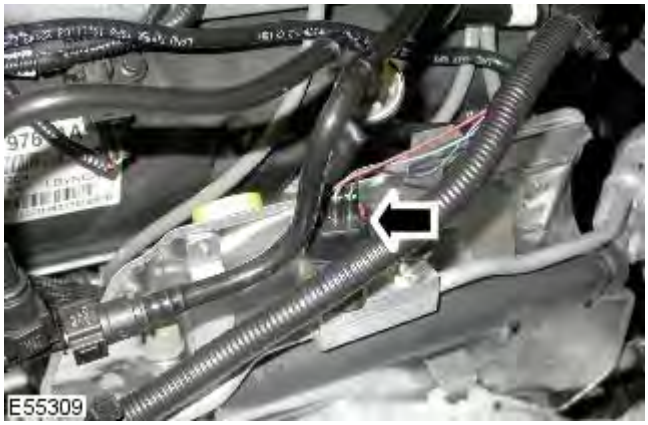

43. Disconnect the A/C pressure transducer electrical connector.

44. Disconnect the battery to engine compartment wiring harness electrical connector.

45. Release the wiring harness from the plenum.

- Release the 2 clips.
- Remove the 3 nuts.

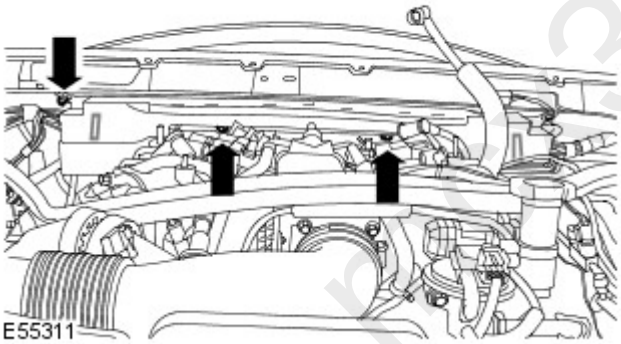

46. Disconnect the brake fluid reservoir electrical connector.

47. Disconnect the ABS module electrical connector.

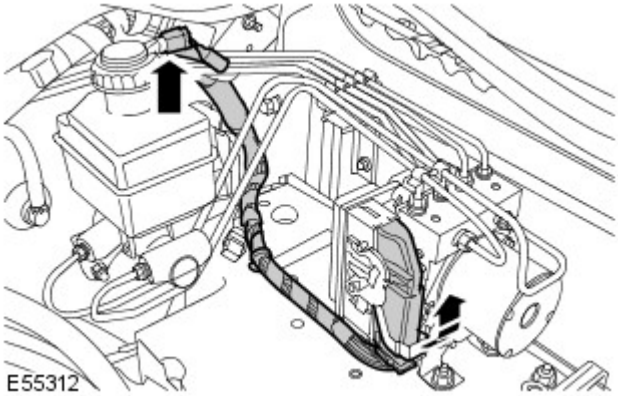

48. Remove the air suspension control module.
For additional information, refer to: Air Suspension Control Module (204-05 Vehicle Dynamic Suspension, Removal and Installation).

49. Driver side: Disconnect 2 electrical connectors from the lower A-pillar.

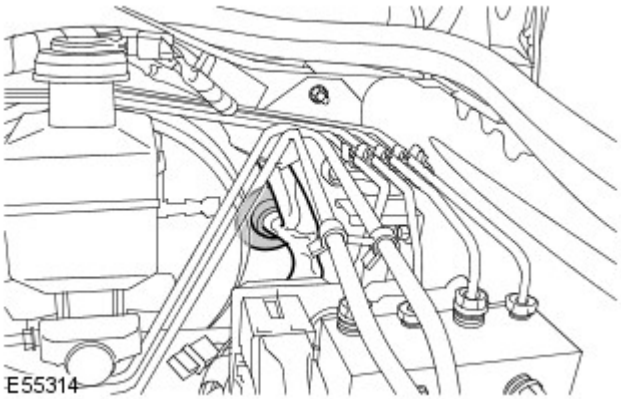

50. Driver side: Release the wiring harness from the bulkhead.

- Release the grommet.

Vehicles with auxiliary heating

51. RH side: Release the heater pipes from the body panel.

- Remove the nut.

All vehicles

52. RH side: Disconnect the 3 body panel electrical connectors.

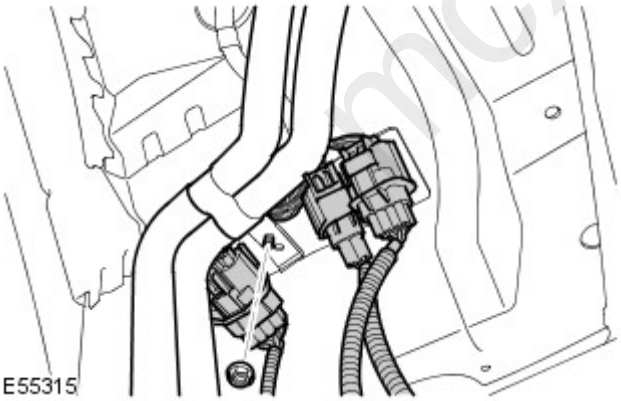

mcx30.com

53. RH side: Release the 3 body panel ground cables.

- Remove the nut.

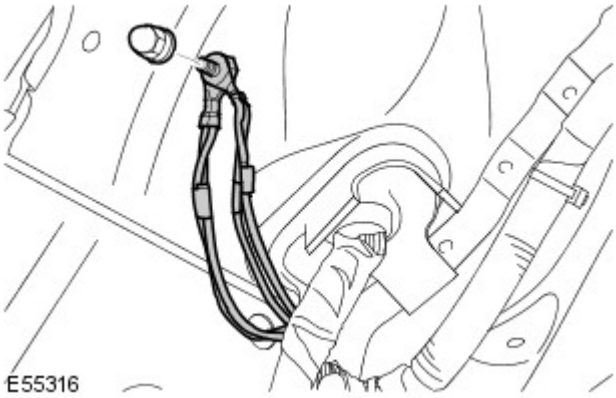

54. RH side: Disconnect the ABS electrical connector.

55. RH side: Release the air suspension pipe from the wiring harness clip.

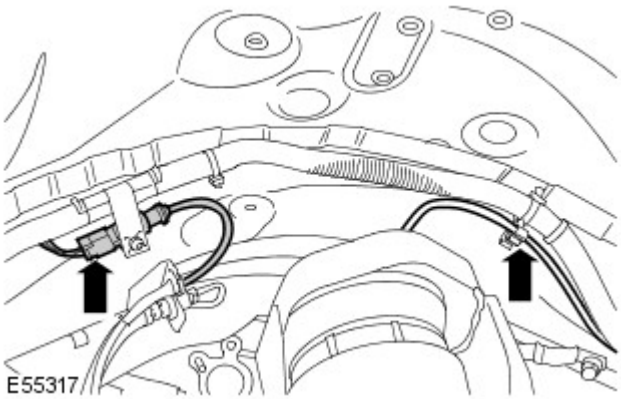

56. RH side: Release 2 engine compartment ground cables.

- Remove the 2 nuts.

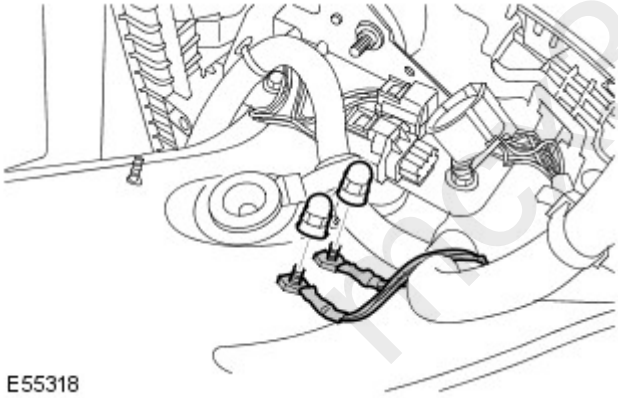

57. Disconnect the ambient air temperature sensor electrical connector.

58. Disconnect both front impact severity sensor electrical connectors.

- Release the 3 clips.

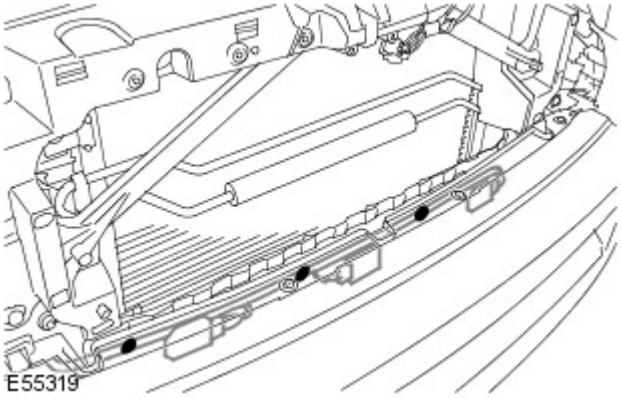

59. RH side: Release the wiring harness.

- Release the 9 clips.

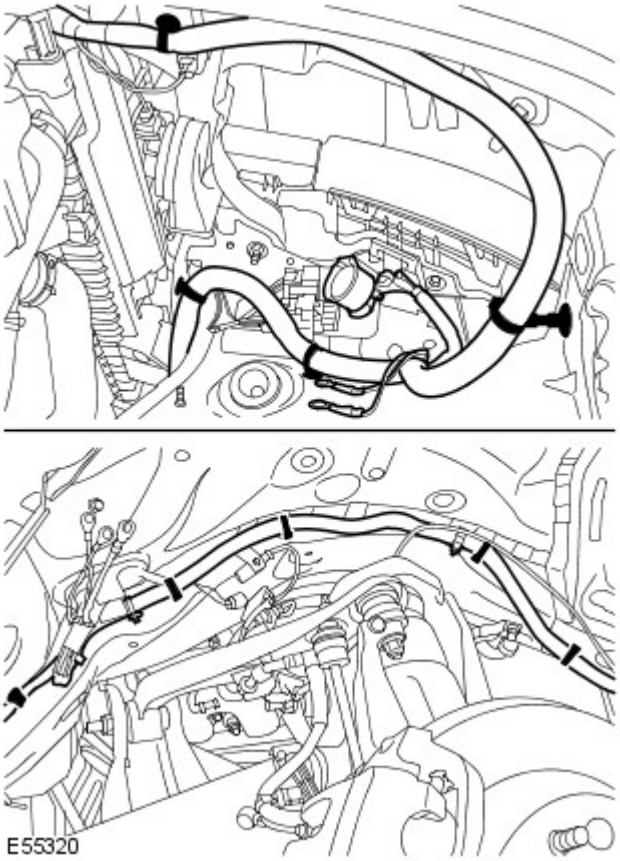

60. Disconnect the hood switch electrical connector.

61. Disconnect both horn electrical connectors.

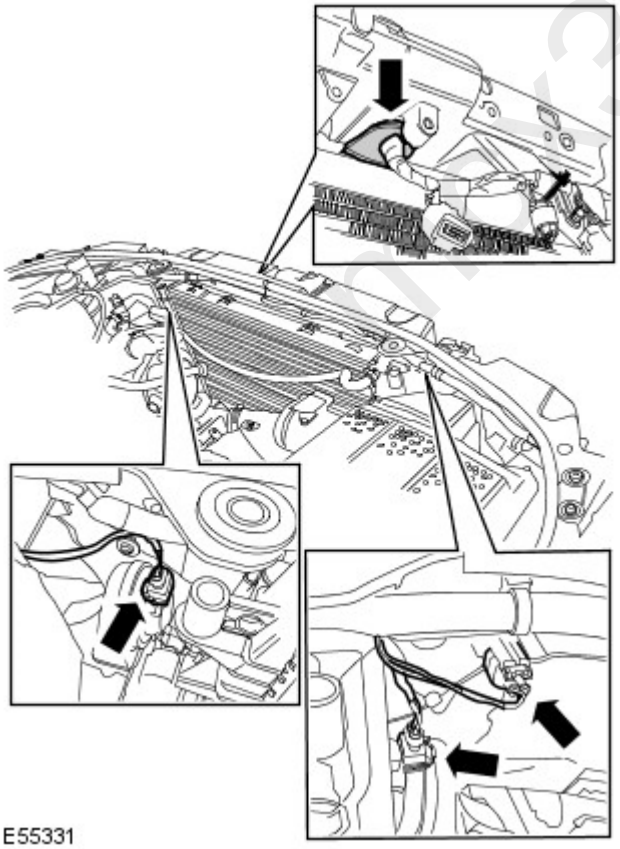

62. If installed, disconnect the speed control module electrical connector.

63. If installed, disconnect the pollution sensor electrical connector.

- Release the clip.
- Release the grommet.

64. Release the hood release cable.

- Release from the 3 clips.

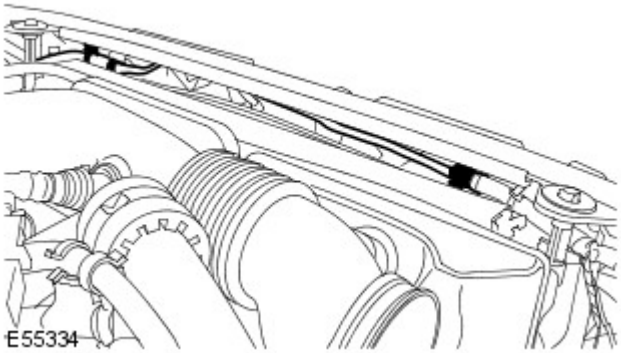

65. Disconnect the front bumper wiring harness electrical connector.

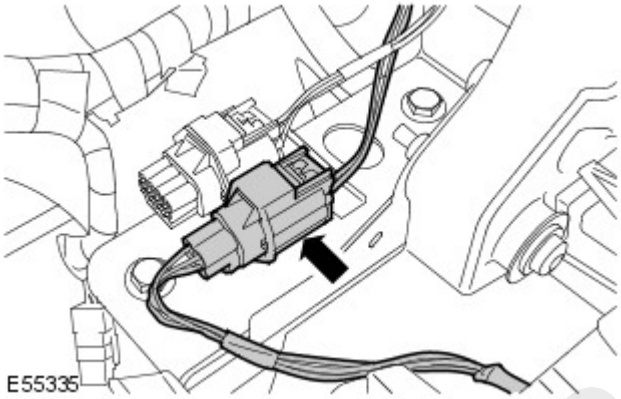

66. With assistance, remove the BJB and wiring harness.

Installation

All vehicles

1. With assistance, install the BJB and wiring harness.

2. Connect the front bumper wiring harness electrical connector.

3. Attach the hood release cable.

- Secure with the clips.

4. If installed, connect the pollution sensor electrical connector.

- Install the grommet.
- Secure the clip.

5. If installed, connect the speed control module electrical connector.

6. Connect the horn electrical connectors.

7. Connect the hood switch electrical connector.

8. RH side: Secure the wiring harness.

- Secure the clips.

9. Connect both front impact electrical connectors.

- Secure the clips.

10. RH side: Attach the air suspension pipe.

11. Connect the ambient air temperature sensor electrical connector.

12. RH side: Attach the engine compartment ground cables.

mcx30.com

- Tighten the nuts to 25 Nm (18 lb.ft).

13. RH side: Connect the ABS electrical connector.

14. RH side: Attach the body panel ground cables.

- Tighten the nut to 25 Nm (18 lb.ft).

15. RH side: Connect the body panel electrical connectors.

Vehicles with auxiliary heating

16. RH side: Secure the heater pipes to the body panel.

- Tighten the nut to 10 Nm (7 lb.ft).

All vehicles

17. Driver side: Attach the wiring harness to the bulkhead.

- Install the grommet.

18. Driver side: Connect the lower A-pillar electrical connectors.

19. Install the air suspension control module.
For additional information, refer to: Air Suspension Control Module (204-05 Vehicle Dynamic Suspension, Removal and Installation).

20. Connect the ABS module electrical connector.

21. Connect the brake fluid reservoir electrical connector.

22. Attach the wiring harness to the plenum.

- Secure the clips.
- Tighten the nuts to 4 Nm (3 lb.ft).

23. Connect the battery to engine compartment wiring harness electrical connector.

24. Connect the A/C pressure transducer electrical connector.

25. Connect the brake booster vacuum pump electrical connector.

26. Attach the hood wiring harness.

- Install the grommet.
- Install the cover.
- Secure with the clips.
- Connect the electrical connectors.
- Connect the washer jet hoses.

27. Install the hood pad.

- Install the clips.

28. Install the windshield wiper motor.
For additional information, refer to: Windshield Wiper Motor (501-16 Wipers and Washers, Removal and Installation).

29. LH side: Attach the wiring harness.

- Install the grommet.
- Secure the clips.

30. LH side: Connect the brake pad wear sensor electrical connector.

31. LH side: Connect the coolant expansion tank level switch electrical connector.

32. LH side: Attach the washer reservoir wiring harness.

- Connect the washer jet hoses.
- Connect the electrical connectors.

33. LH side: Attach the engine compartment ground cables.

- Secure the clips.

mcx30.com

- Tighten the nuts to 25 Nm (18 lb.ft).

34. LH side: Connect the ABS electrical connector.

35. LH side: Attach the air suspension pipes.

- Secure the clips.

36. LH side: Attach the body panel ground cables.

- Tighten the nut to 25 Nm (18 lb.ft).

37. LH side: Connect the body panel electrical connectors.

Vehicles with auxiliary climate control

38. LH side: Secure the A/C lines to the body panel.

- Tighten the nut to 10 Nm (7 lb.ft).

All vehicles

39. LH side: Connect the adaptive front lighting control module electrical connector.

40. LH side: Connect the washer jet hose.

41. Passenger side: Connect the transfer case electrical connector.

42. Passenger side: Connect the engine wiring harness electrical connector.

43. Install the headlamps.
For additional information, refer to: Headlamp Assembly (417-01 Exterior Lighting, Removal and Installation).

44. Install the fender splash shields.
For additional information, refer to: Fender Splash Shield (501-02 Front End Body Panels, Removal and Installation).

45. Attach the BJB wiring harness to the bulkhead.

- Connect the electrical connectors.
- Install the grommet.

46. Install the battery ground cable.

- Attach the additional ground cable.
- Tighten the nut to 25 Nm (18 lb.ft).

47. Secure the BJB to the bracket.

- Tighten the bolt to 6 Nm (4 lb.ft).

48. Connect the heater motor electrical connector.

49. Connect the ground cables to the lower A-pillar.

- Tighten the nut to 10 Nm (7 lb.ft).

50. Install the CJB bracket.

- Tighten the nuts to 10 Nm (7 lb.ft).
- Secure the clips.
- Connect the electrical connectors.
- Tighten the bolts to 25 Nm (18 lb.ft).

51. Install the CJB.
For additional information, refer to: Central Junction Box (CJB) (418-00 Module Communications Network, Removal and Installation).

52. Connect the battery positive cable to the BJB.

- Tighten the nut to 25 Nm (18 lb.ft).

53. Install the BJB cover.

- Secure the clip.

mcx30.com

54. Install the ECM.

- Install the ECM top cover.

55. Install the ECM cover.

- Tighten the Torx screws.
- Connect the electrical connectors.

56. Install the auxiliary battery tray.
For additional information, refer to: Auxiliary Battery Tray (414-01 Battery, Mounting and Cables, Removal and Installation).

57. Install the battery tray.
For additional information, refer to: Battery Tray (414-01 Battery, Mounting and Cables, Removal and Installation).

58. Install the four-wheel drive control module.
For additional information, refer to: Four-Wheel Drive (4WD) Control Module (308-07A Four-Wheel Drive Systems, Removal and Installation).

59. Install the air cleaner assembly.
For additional information, refer to: Air Cleaner (303-12C Intake Air Distribution and Filtering - V6 4.0L Petrol, Removal and Installation).

60. Install the radiator grille.
For additional information, refer to: Radiator Grille (501-08 Exterior Trim and Ornamentation, Removal and Installation).

61. Install the ignition coils.
For additional information, refer to: Ignition Coil (303-07A Engine Ignition - V6 4.0L Petrol, Removal and Installation).

62. Connect the battery ground cable.
For additional information, refer to: Specifications (414-00 Battery and Charging System - General Information, Specifications).

63. Check the headlamp beam alignment.
For additional information, refer to: Headlamp Adjustment (417-01 Exterior Lighting, General Procedures).

mcx30.com

Published: 11-May-2011

Module Communications Network - Battery Junction Box (BJB)V8 5.0L Petrol

Removal and Installation

Removal

- NOTE: Some variation in the illustrations may occur, but the essential information is always correct.
- NOTE: Removal steps in this procedure may contain installation details.

1. For additional information, refer to: Battery (414-01 Battery, Mounting and Cables, Removal and Installation).
2. For additional information, refer to: Air Cleaner LH (303-12D Intake Air Distribution and Filtering - V8 5.0L Petrol, Removal and Installation).
3. For additional information, refer to: Air Cleaner RH (303-12D Intake Air Distribution and Filtering - V8 5.0L Petrol, Removal and Installation).
4.

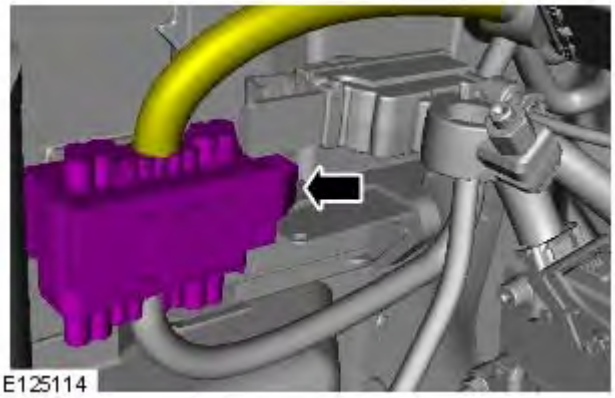
E125114

5.

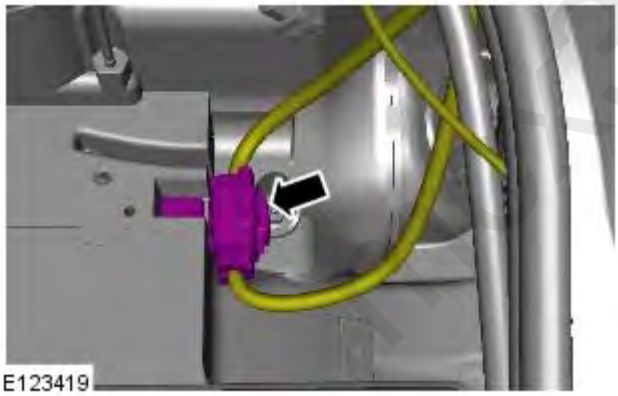
E123419

6.

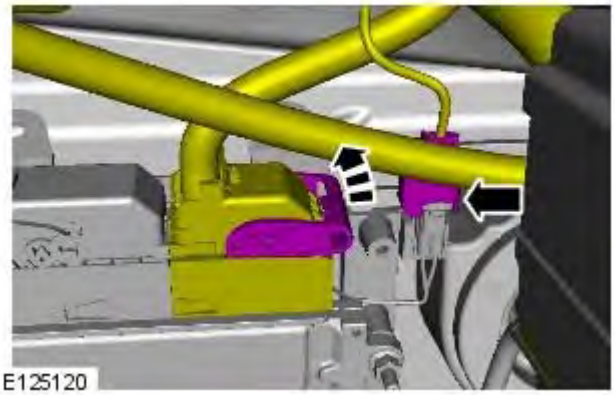
E125120

7.

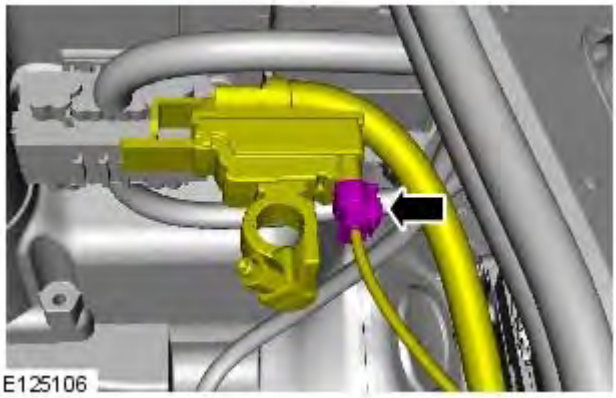

8.

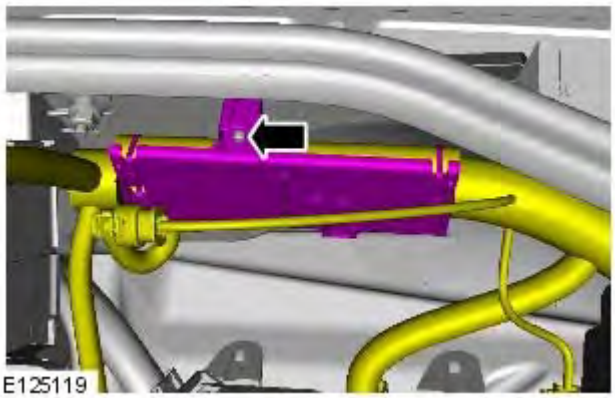

9. Remove the front LH road wheel and tire.

10.

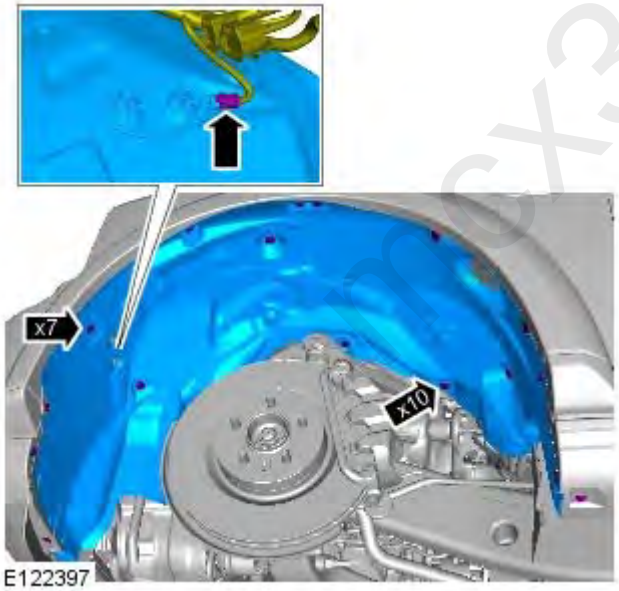

mcx30.com

11.

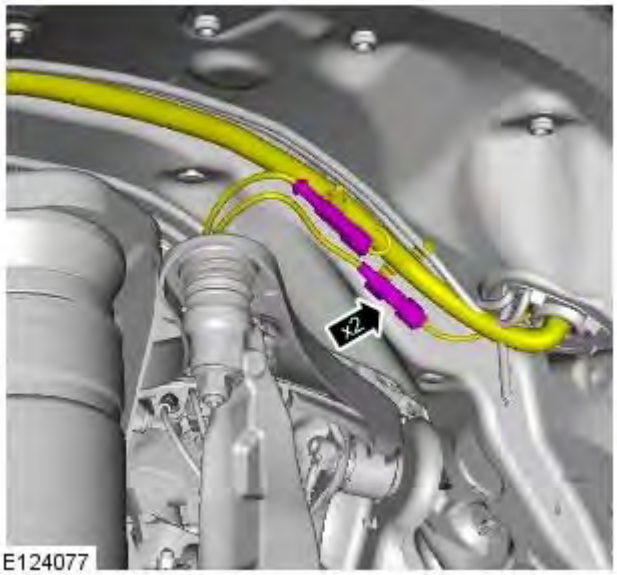

12.

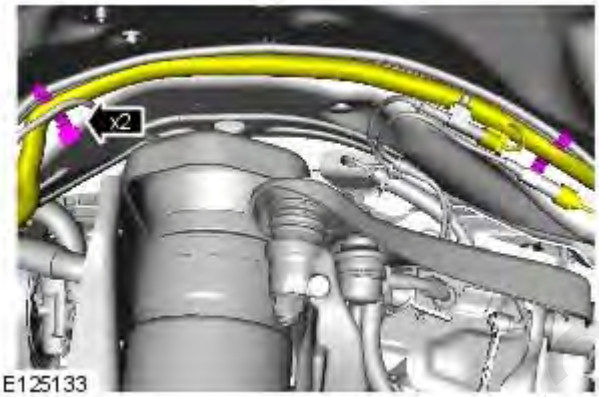

13. TORQUE: 10 Nm

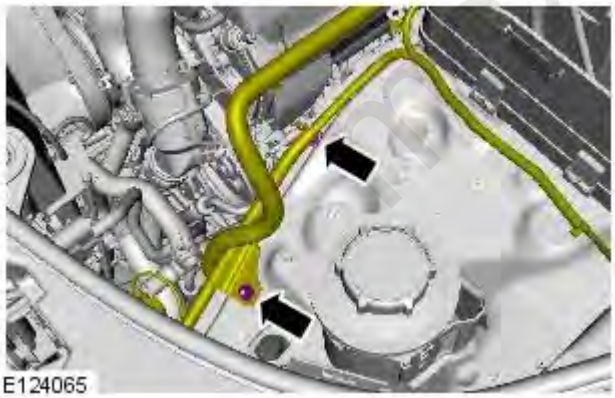

mrx30.com

14.

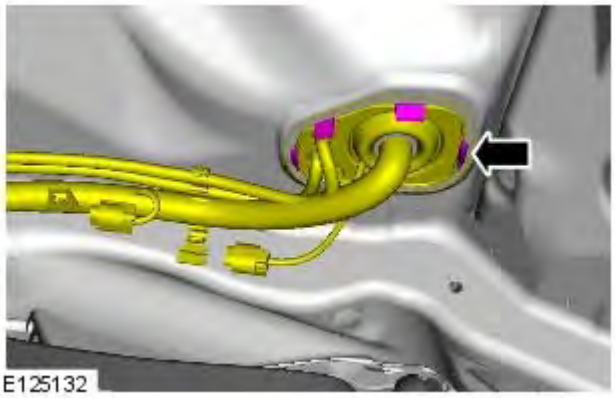

15. NOTE: RHD illustration shown, LHD is similar.

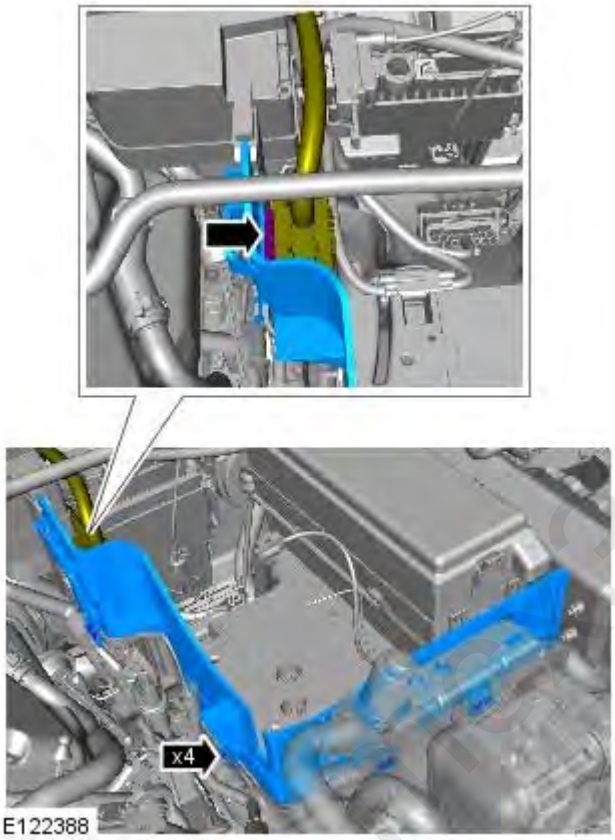

16.

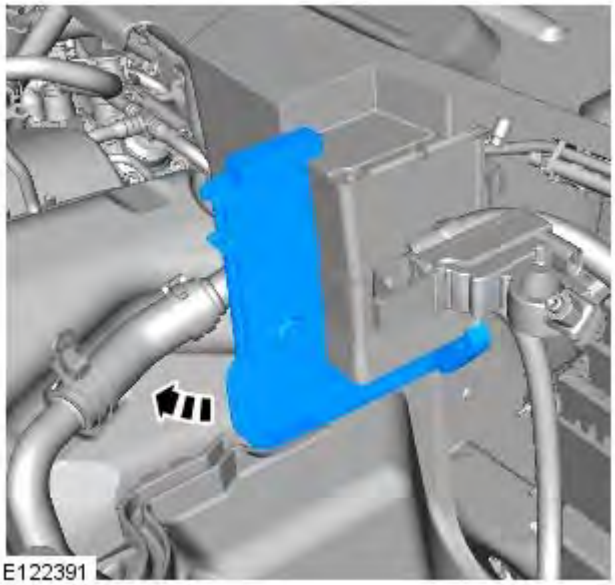

17. TORQUE: 12 Nm

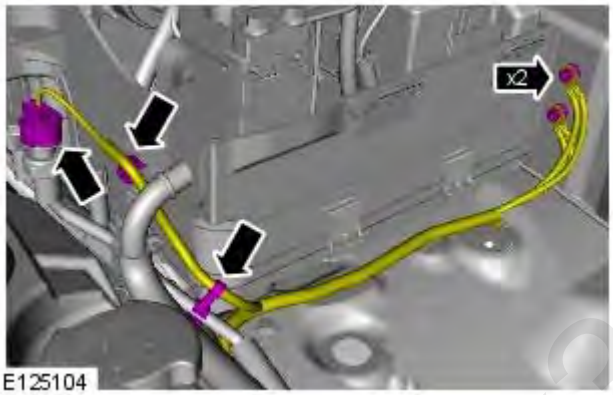

18.

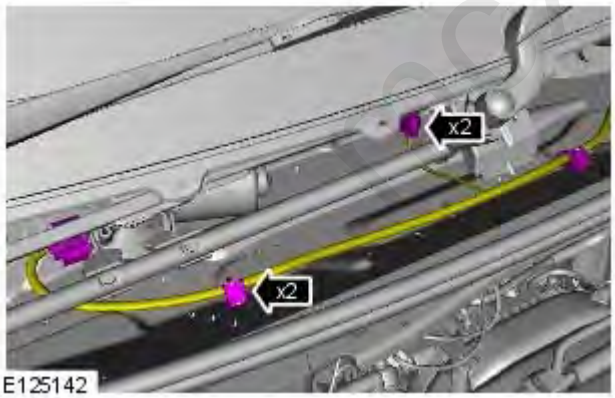

ccx30.com

19.

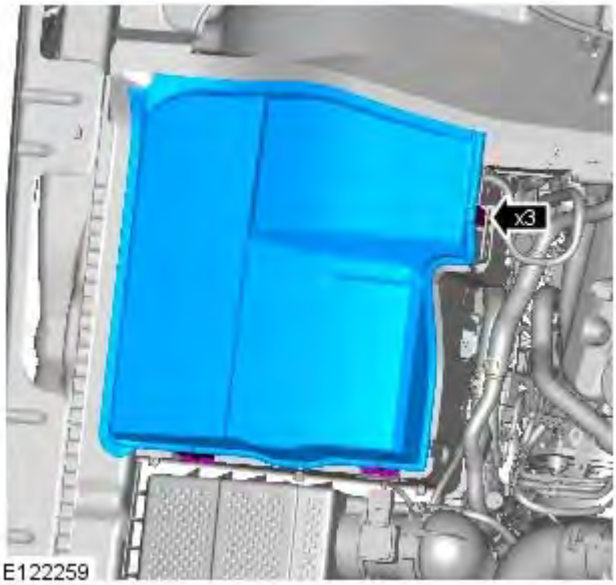

E122259

20. TORQUE: 10 Nm

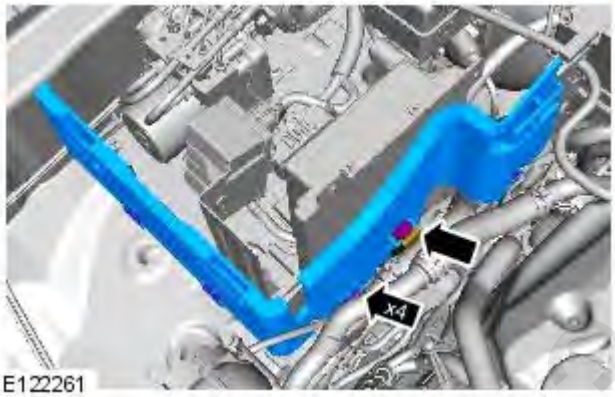

E122261

21.

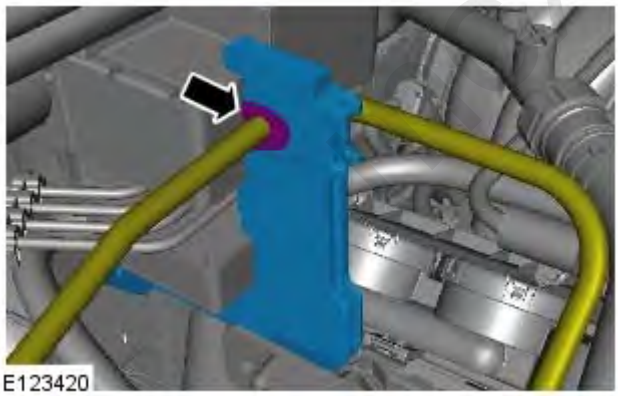
E123420

mx30.com

22.

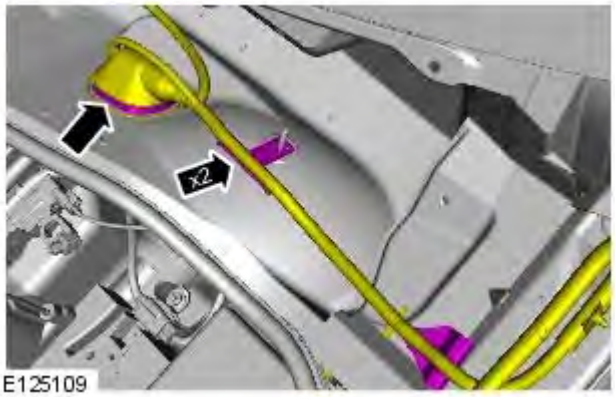

E125109

23. TORQUE: 10 Nm

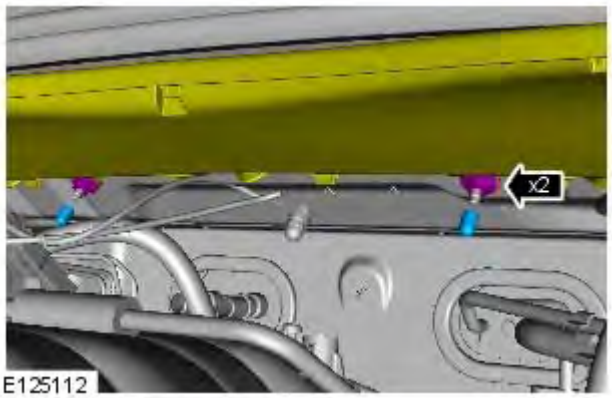

E125112

24. TORQUE: 10 Nm

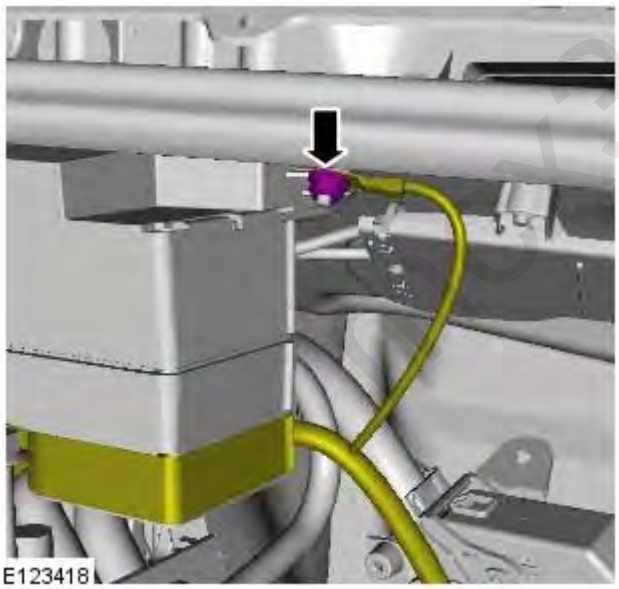
E123418

mex30.com

25. TORQUE: 10 Nm

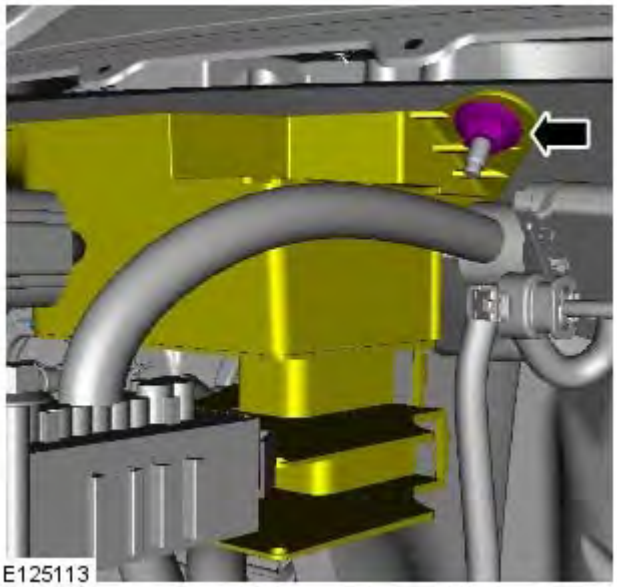
E125113

26. TORQUE: 10 Nm

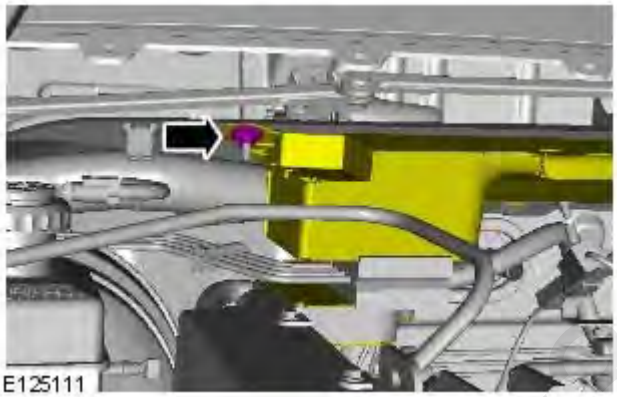
E125111

27.

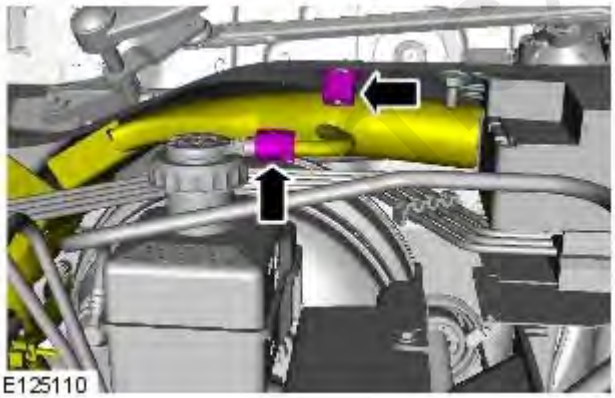
E125110

28. For additional information, refer to: Brake Booster (206-07 Power Brake Actuation, Removal and Installation).

mkx30.com

29. TORQUE: 10 Nm

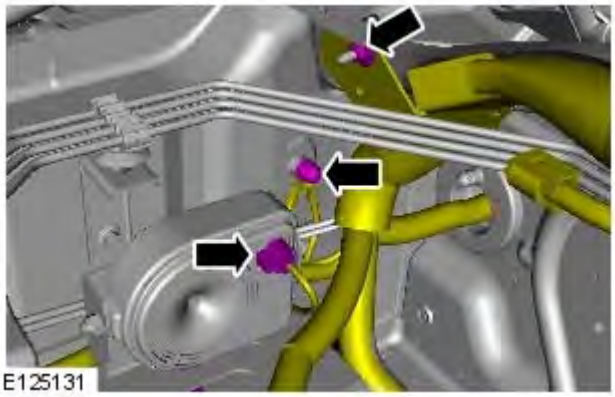
E125131

30.

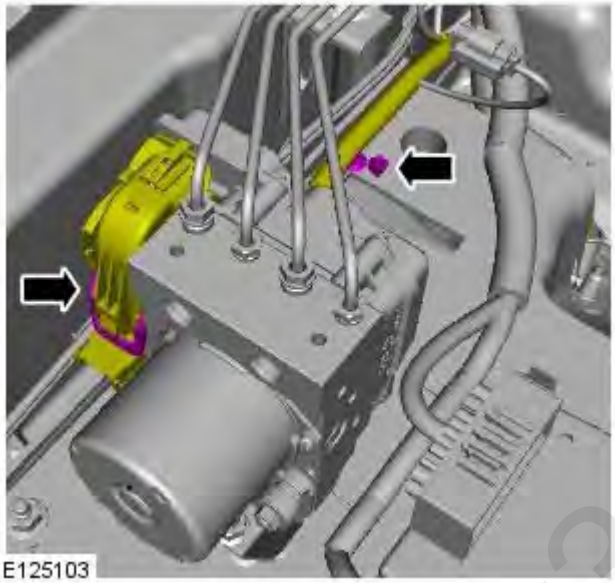
E125103

31.

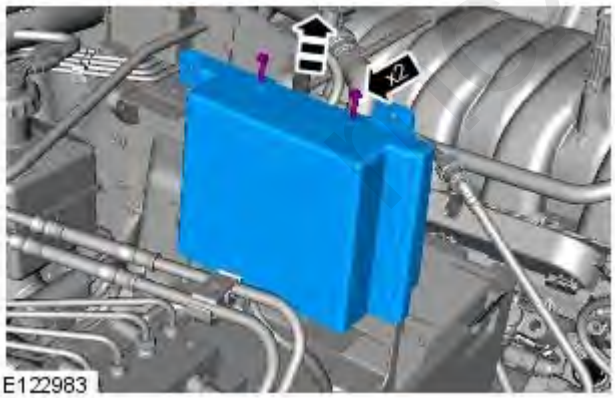

E122983

mx30.com

32.

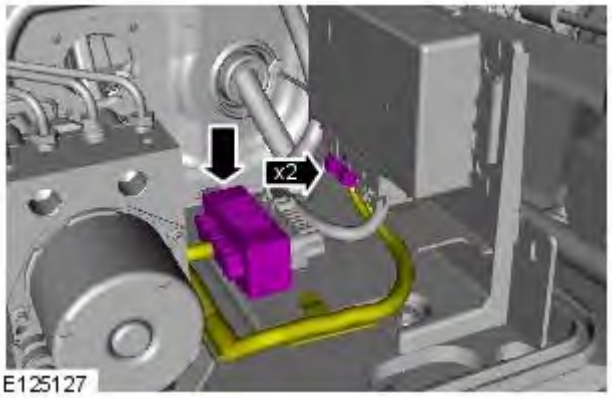

E125127

33.

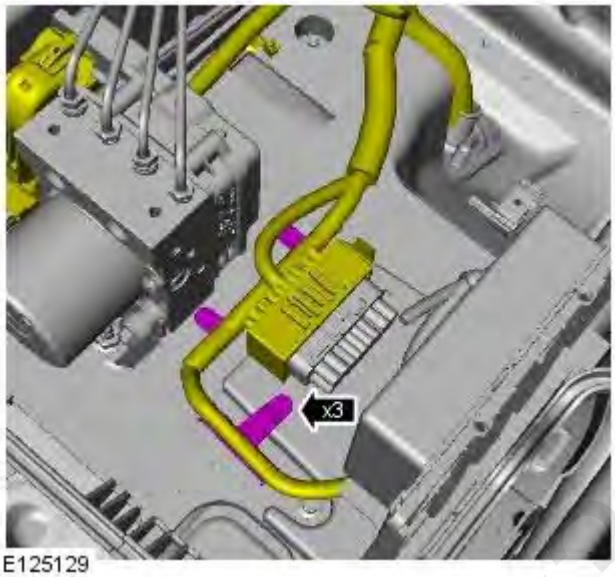

E125129

34.

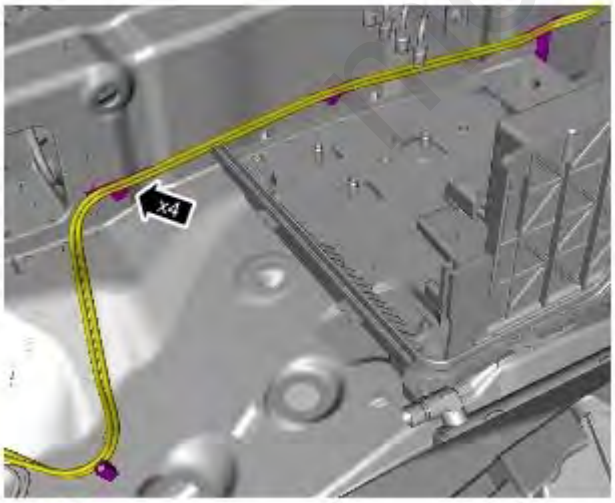

E125125

mcx30.com

35.

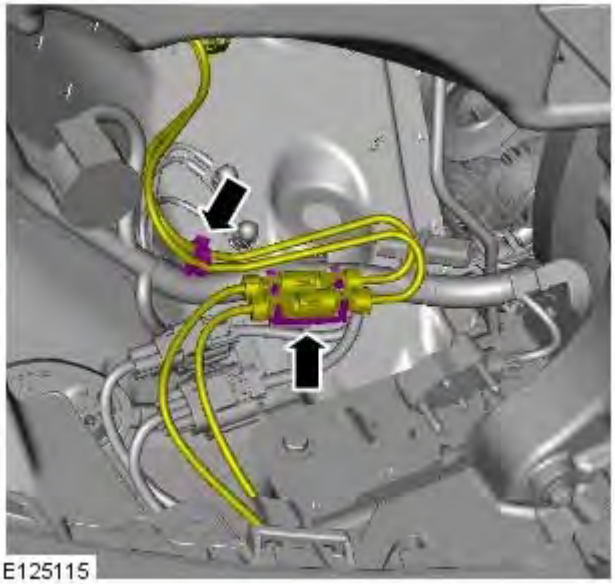
E125115

36.

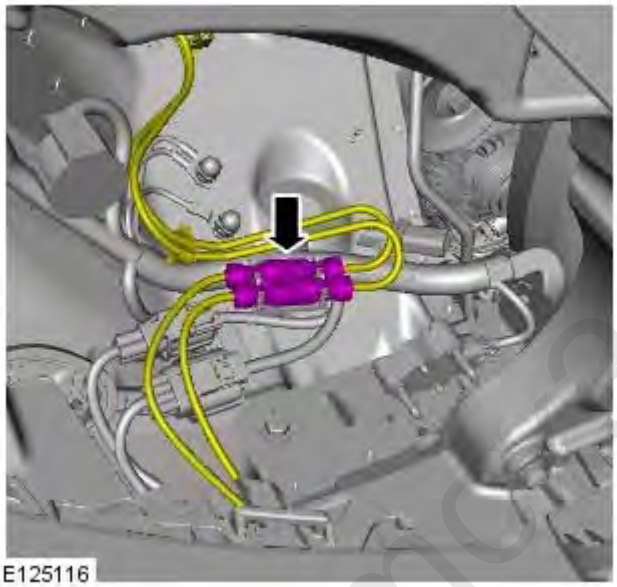
E125116

37. TORQUE: 10 Nm

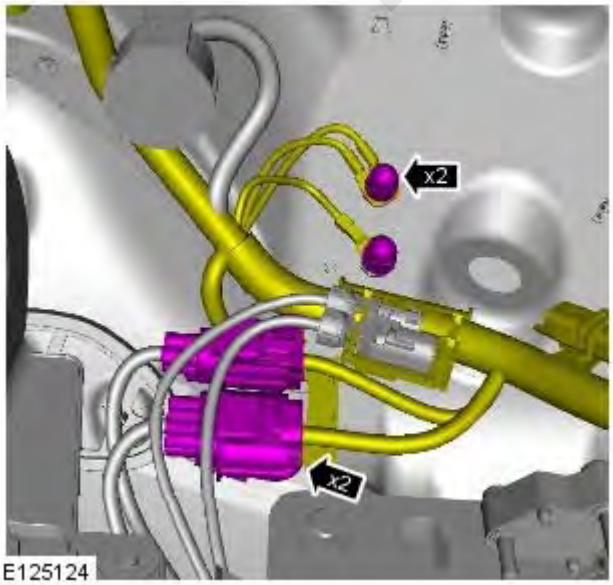

E125124

mc30.com

38.

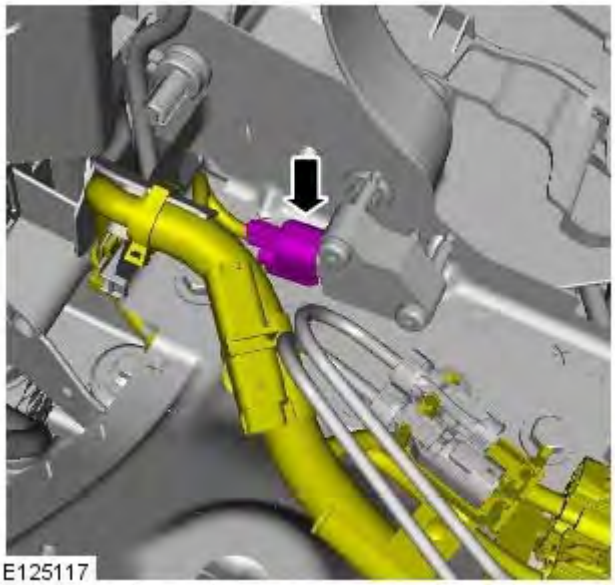

39.

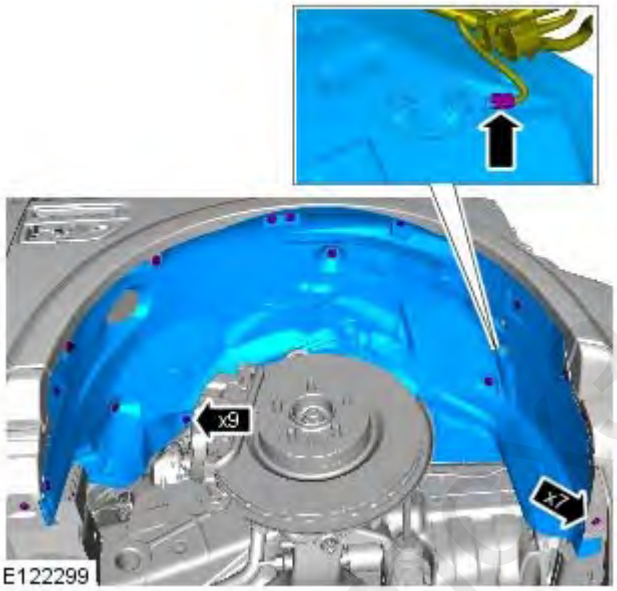

40.

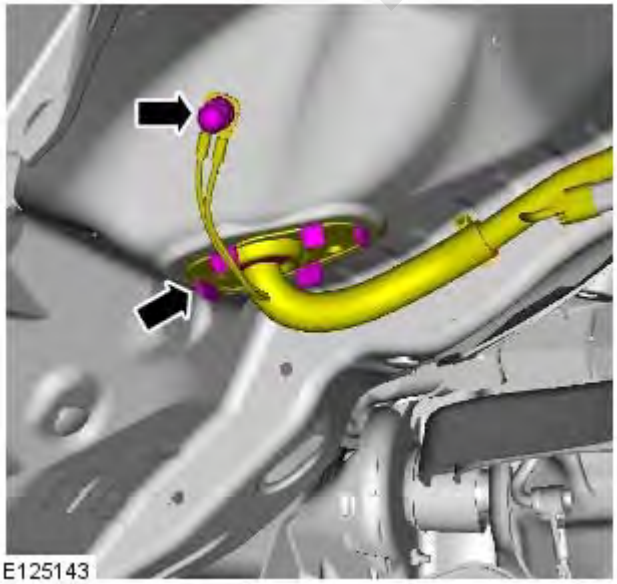

mm30.com

41.

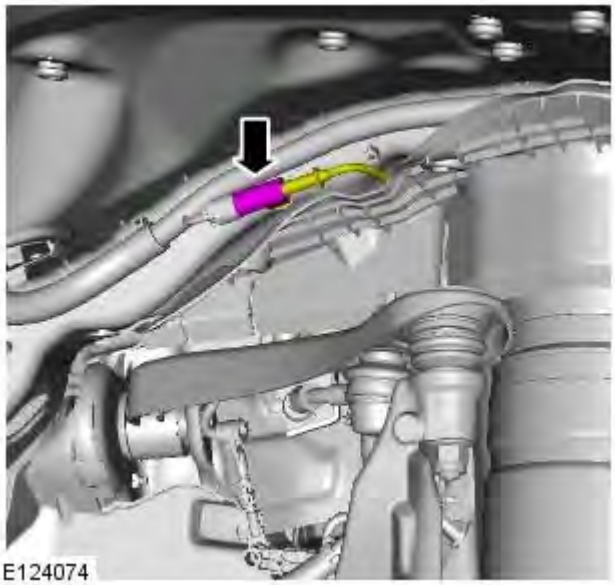

42.

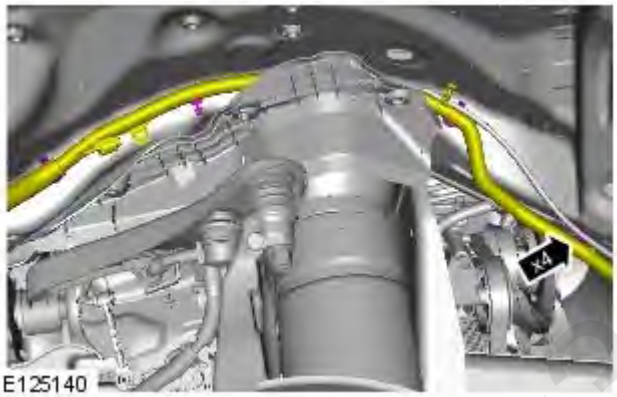

43.

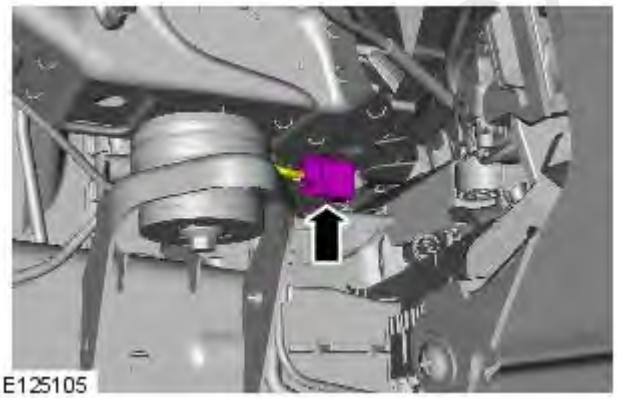

x30.com

44.

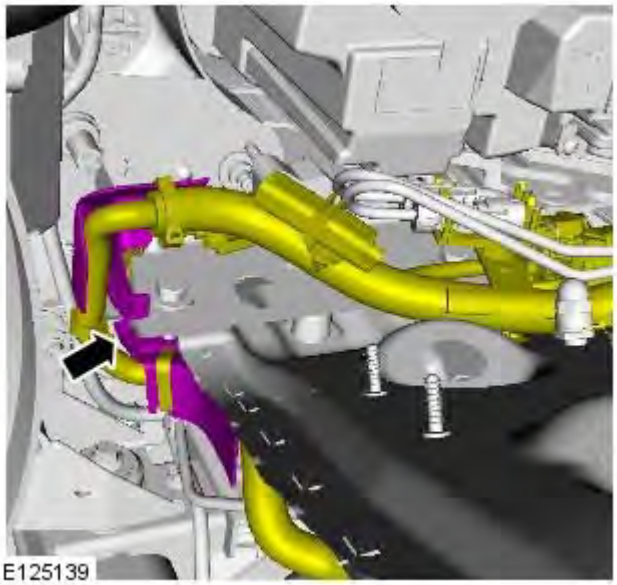

45.

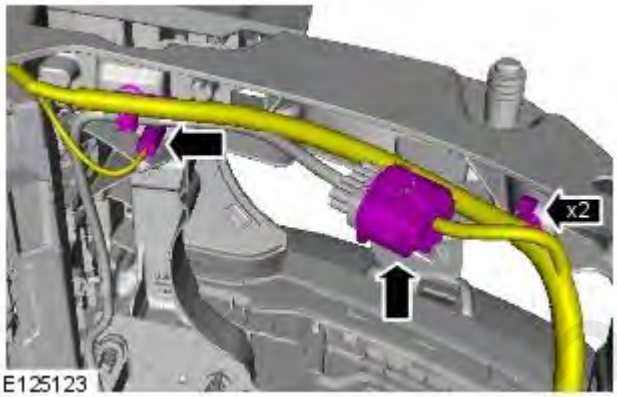

46.

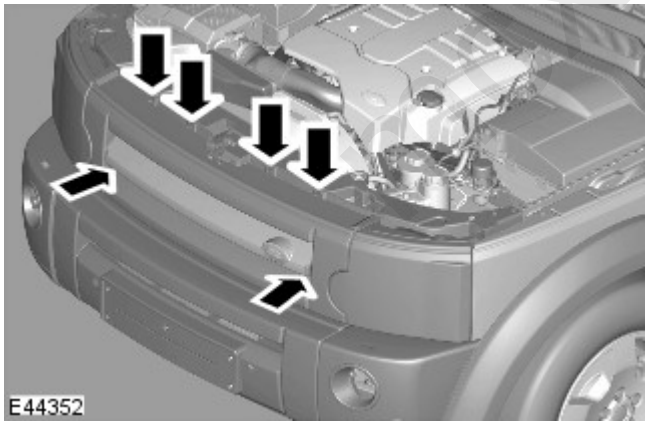

volvoxc90.com

47.

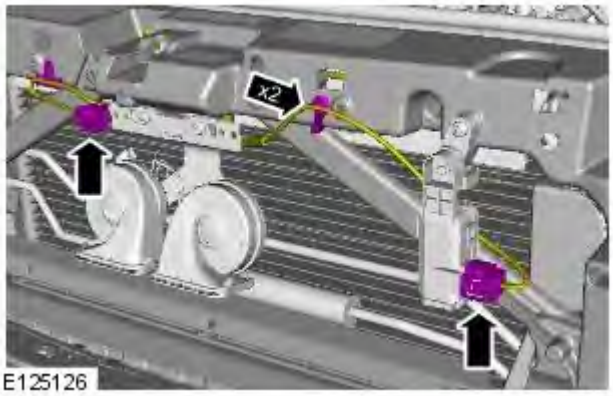

48.

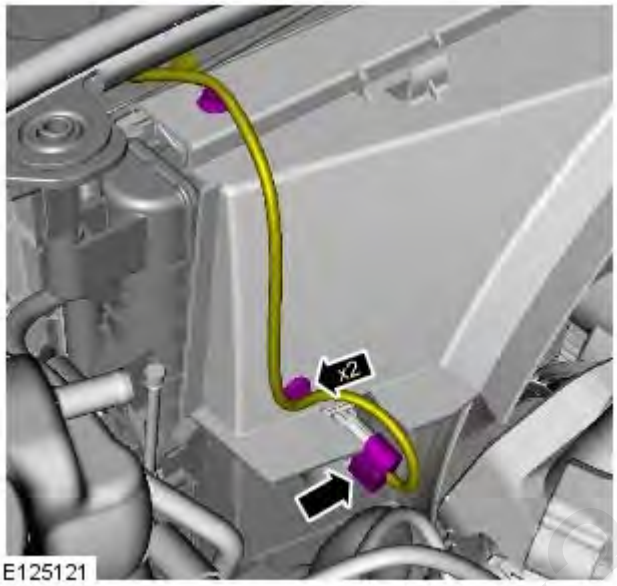

mcx30.com

49.

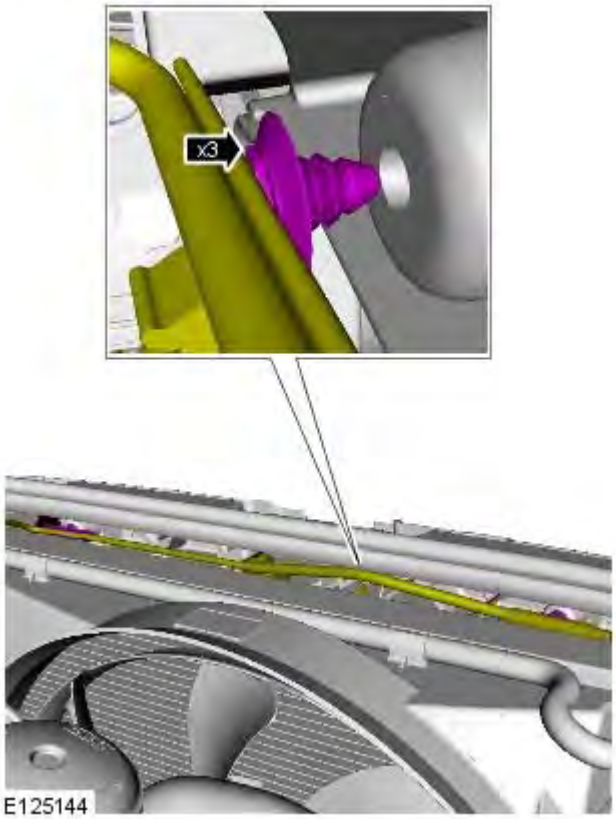

50.

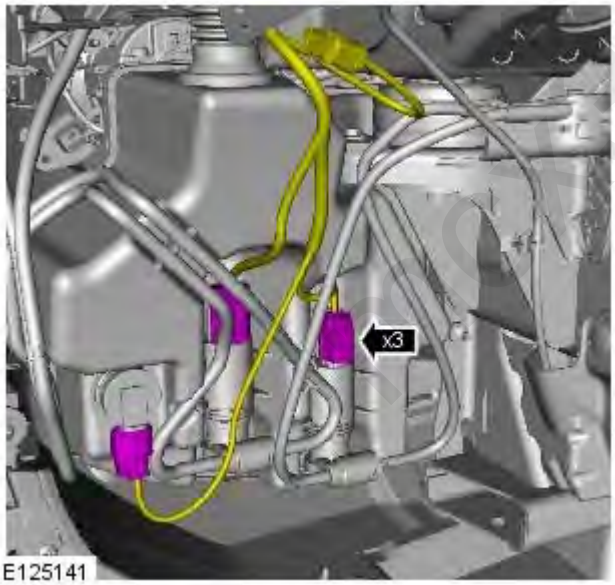

51. For additional information, refer to: Instrument Panel (501-12 Instrument Panel and Console, Removal and Installation).

52. TORQUE: 10 Nm

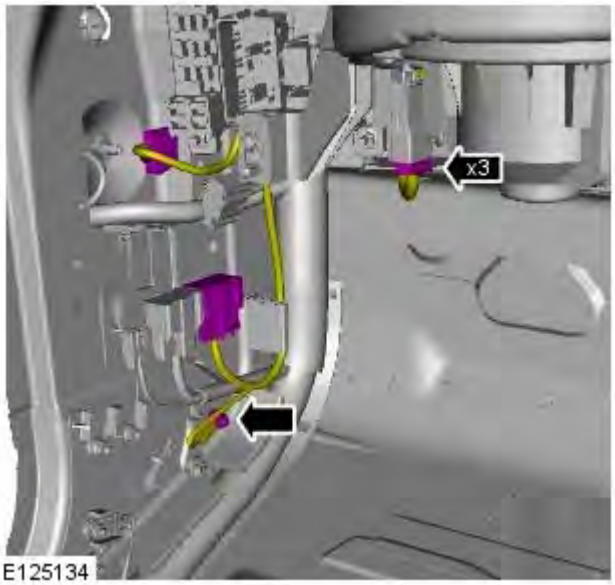

53.

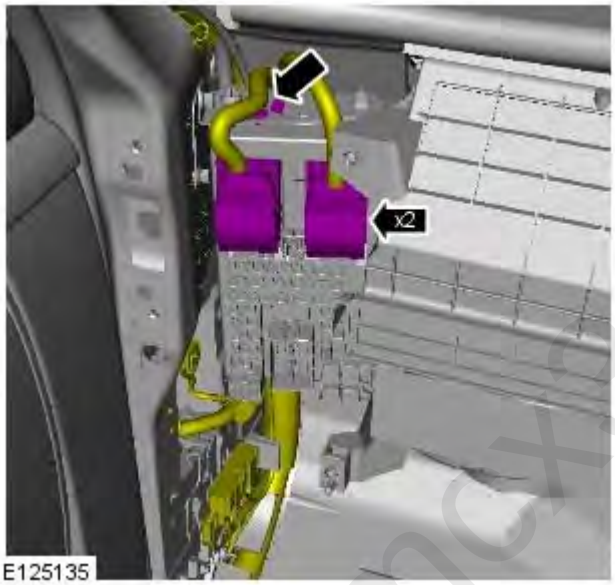

mcx30.com

54. TORQUE: 10 Nm

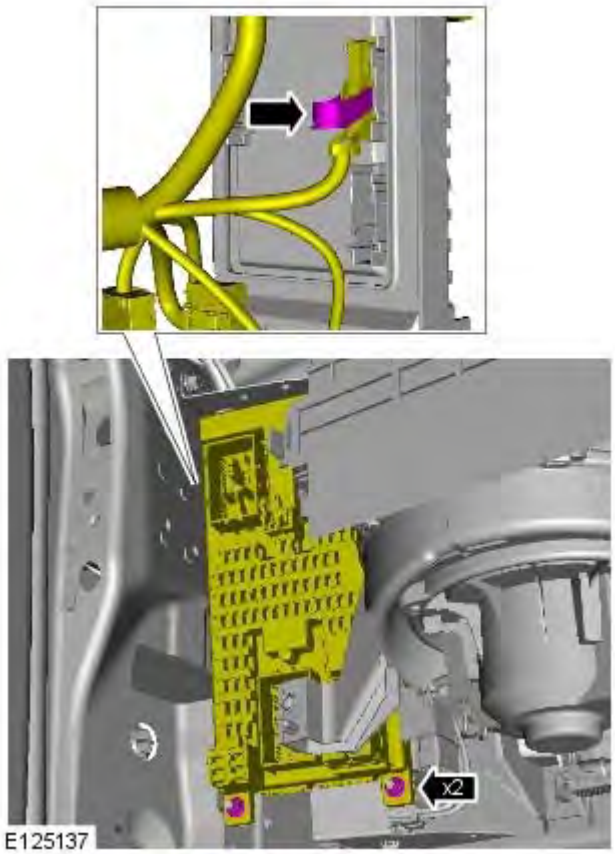

55.

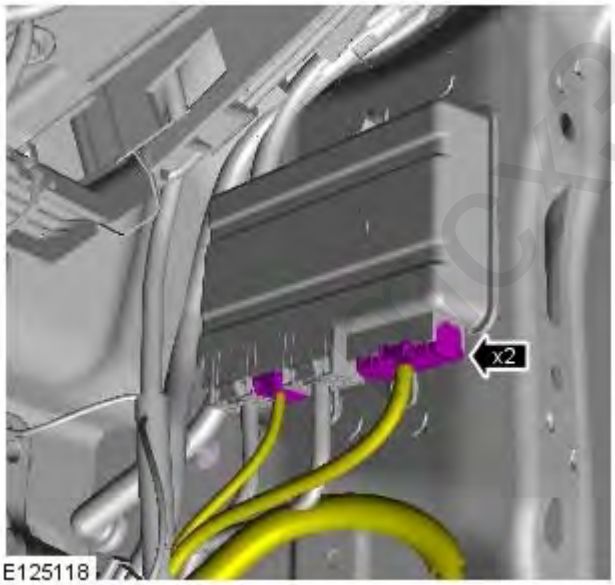

cx30.com

56.

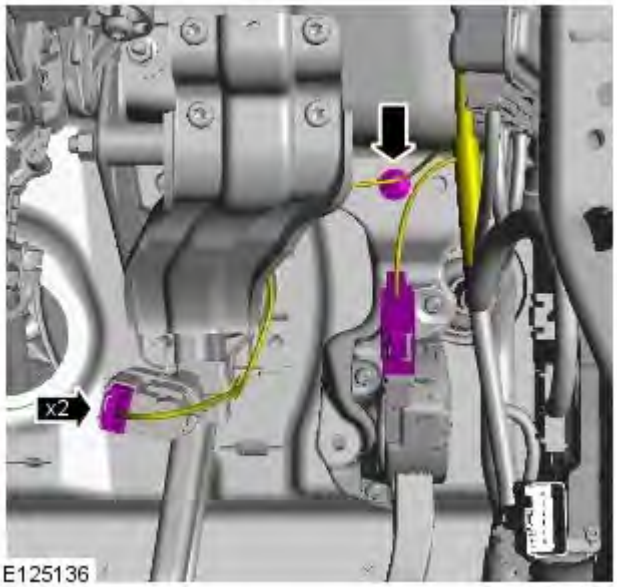

57.

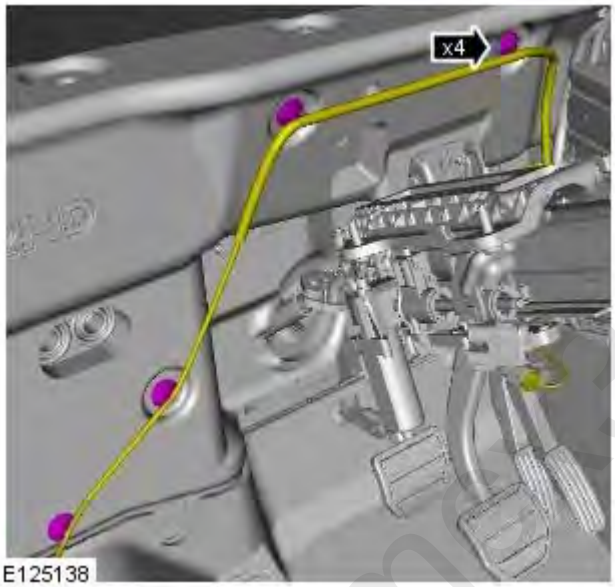

58.

E125130

Installation

1. To install, reverse the removal procedure.

mcx30.com

Published: 11-May-2011

Module Communications Network - Battery Junction Box (BJB)TDV6 2.7L Diesel

Removal and Installation

Removal

- NOTE: The BJB is an integral component of the engine compartment wiring harness and cannot be removed separately.

All vehicles

1. Disconnect the battery ground cable.
   For additional information, refer to: Specifications (414-00 Battery and Charging System - General Information, Specifications).
2. Make the SRS system safe.
   For additional information, refer to: Standard Workshop Practices (100-00 General Information, Description and Operation).
3. Remove the engine cover.
   For additional information, refer to: Engine Cover - TDV6 3.0L Diesel (501-05 Interior Trim and Ornamentation, Removal and Installation).
4. Remove the radiator grille.
   For additional information, refer to: Radiator Grille (501-08 Exterior Trim and Ornamentation, Removal and Installation).
5. Remove the air cleaner assembly.
   For additional information, refer to: Air Cleaner (303-12A Intake Air Distribution and Filtering - TDV6 2.7L Diesel, Removal and Installation).
6. Remove the four-wheel drive control module.
   For additional information, refer to: Four-Wheel Drive (4WD) Control Module (308-07A Four-Wheel Drive Systems, Removal and Installation).
7. Remove the battery tray.
   For additional information, refer to: Battery Tray (414-01 Battery, Mounting and Cables, Removal and Installation).
8. Remove the auxiliary battery tray.
   For additional information, refer to: Auxiliary Battery Tray (414-01 Battery, Mounting and Cables, Removal and Installation).
9. Remove the ECM cover.
   - Disconnect 2 electrical connectors for access.
   - Disconnect the 2 ECM electrical connectors.
   - Remove the 4 Torx screws.

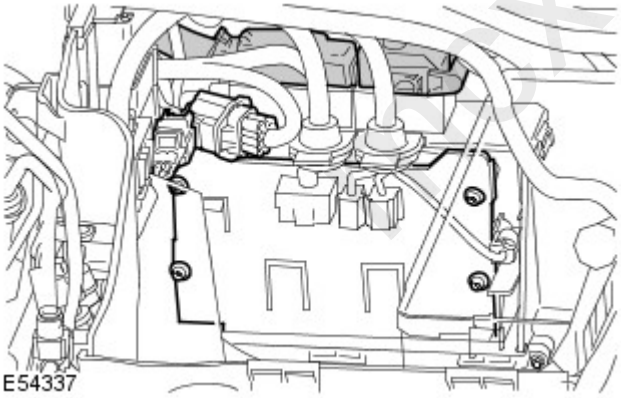

10. Remove the ECM.
11. Remove the BJB cover.
    - Release the clip.
    - Remove the ECM top cover.

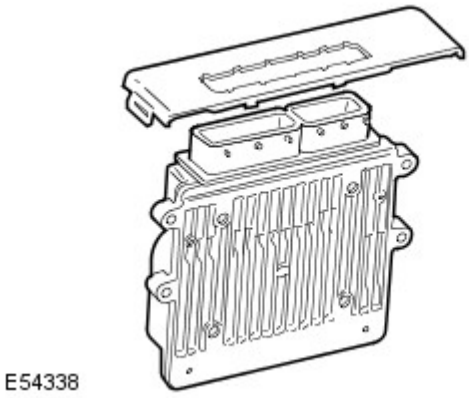

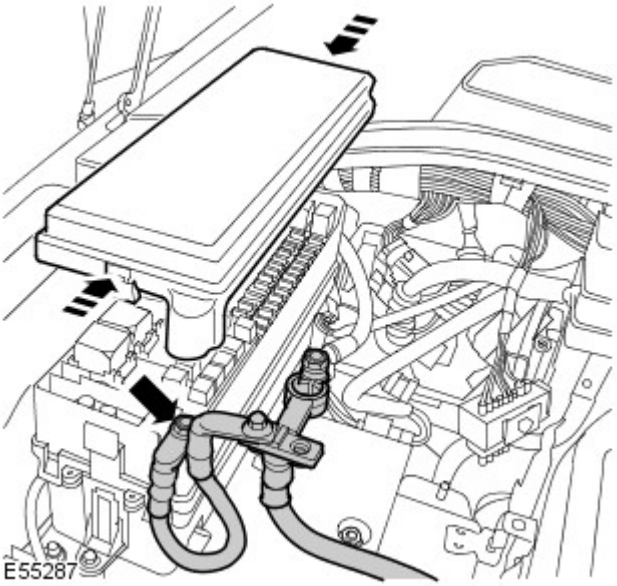

12. Disconnect the battery positive cable from the BJB.

- Remove the nut.

13. Remove both cowl side trim panels.
For additional information, refer to: Cowl Side Trim Panel (501-05 Interior Trim and Ornamentation, Removal and Installation).

14. Remove the CJB.
For additional information, refer to: Central Junction Box (CJB) (418-00 Module Communications Network, Removal and Installation).

15. Release the CJB bracket.

- Release the 3 upper wiring harness clips.
- Remove the 2 bolts.

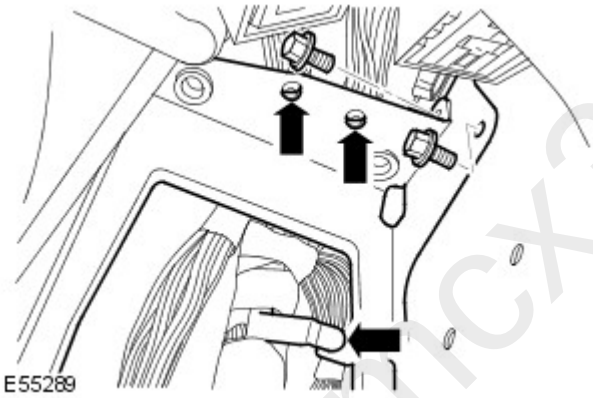

16. Remove the CJB bracket.

- Disconnect the 2 electrical connectors.
- Release the 3 lower wiring harness clips.
- Remove the 2 nuts.

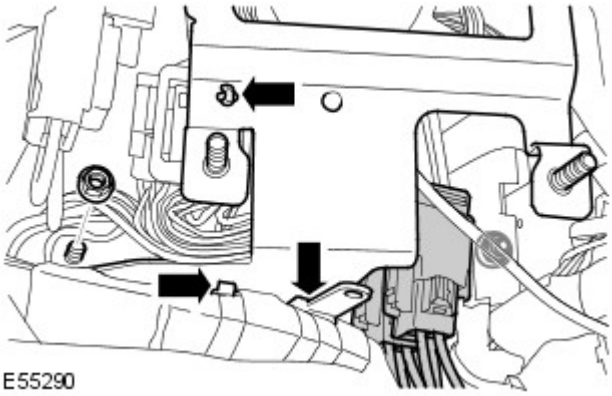

mcx30.com

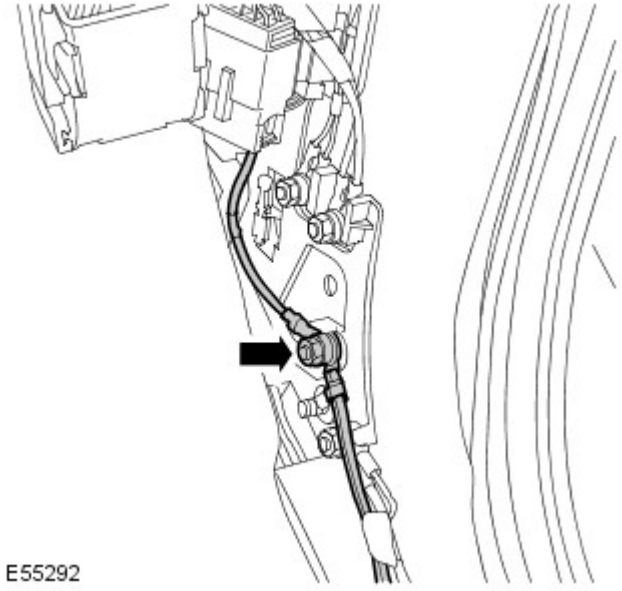

17. Release the 2 ground cables from the lower A-pillar.

- Remove the nut.

18. Disconnect the heater motor electrical connector.

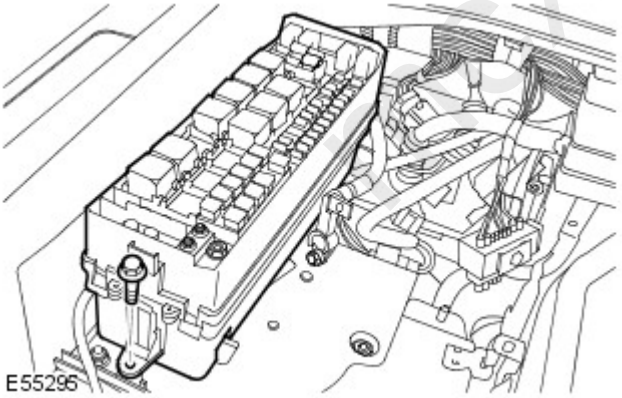

19. Release the BJB from the bracket.

- Remove the bolt.

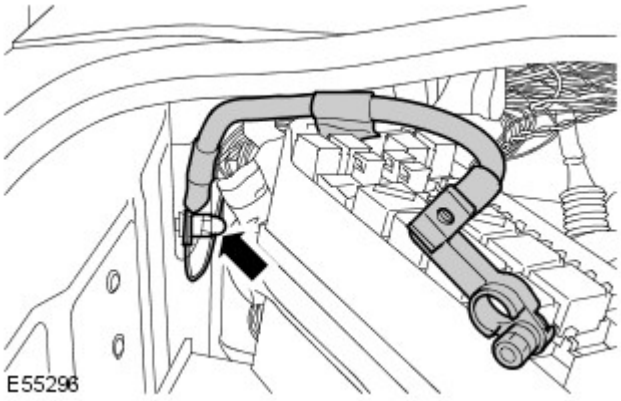

20. Remove the battery ground cable.

- Remove the nut.
- Release the additional ground cable.

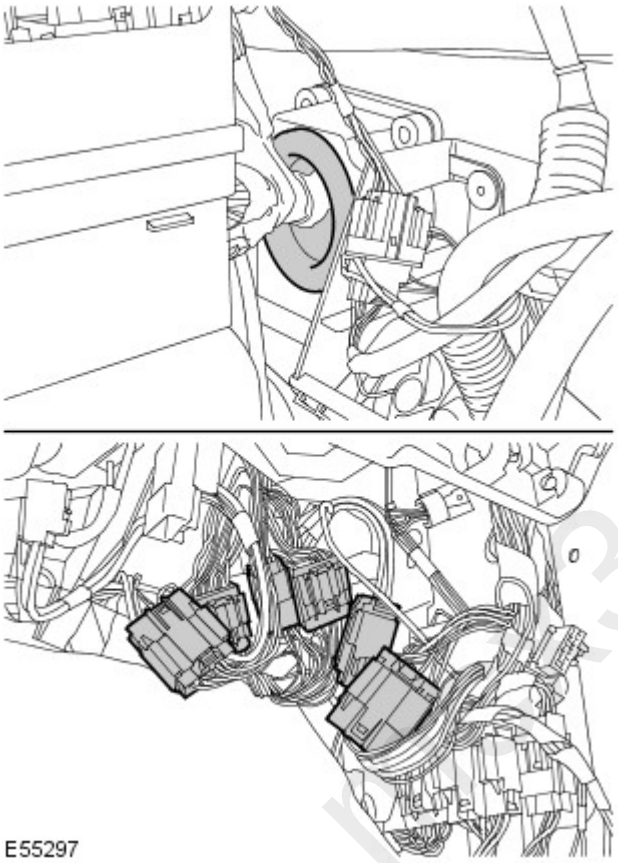

21. Release the BJB wiring harness from the bulkhead.

- Disconnect the 6 electrical connectors.
- Release the grommet.

22. Raise and support the vehicle.

23. Remove both front fender splash shields.
For additional information, refer to: Fender Splash Shield (501-02 Front End Body Panels, Removal and Installation).

24. Remove both headlamps.
For additional information, refer to: Headlamp Assembly (417-01 Exterior Lighting, Removal and Installation).

25. Passenger side: Disconnect the engine wiring harness electrical connector.

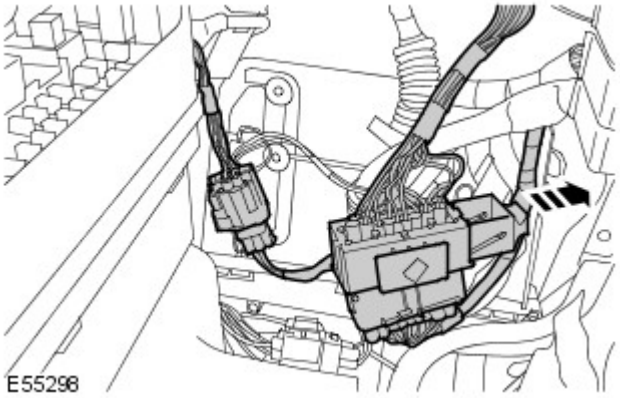

26. Passenger side: Disconnect the transfer case electrical connector.

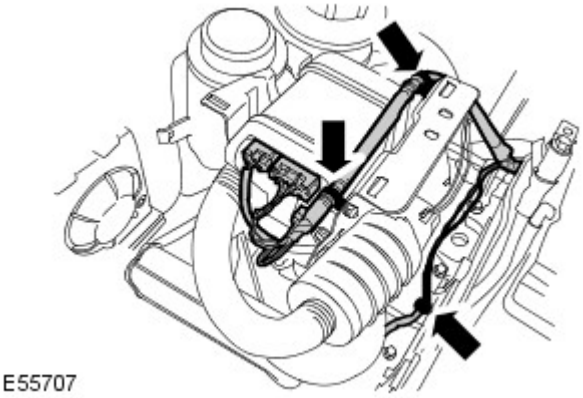

27. LH side: Release the wiring harness from the fuel fired heater.

- Disconnect the 3 electrical connectors.
- Release the 3 clips.

28. LH side: Disconnect the washer jet hose.

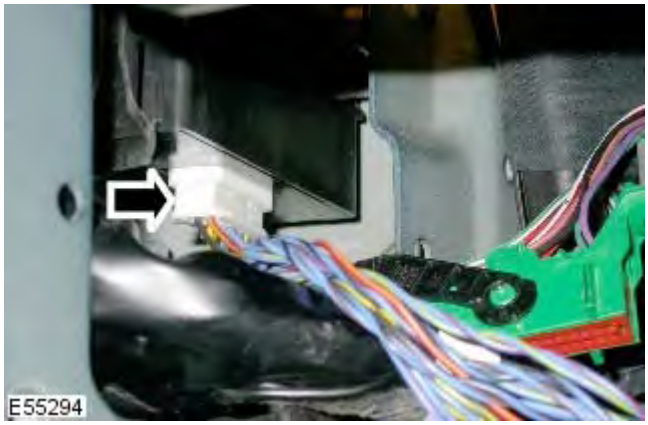

29. LH side: Disconnect the adaptive front lighting control module electrical connector.

Vehicles with auxiliary climate control

30. LH side: Release the A/C lines from the body panel.

All vehicles

- Remove the nut.

mcx30.com

31. LH side: Disconnect the 3 body panel electrical connectors.

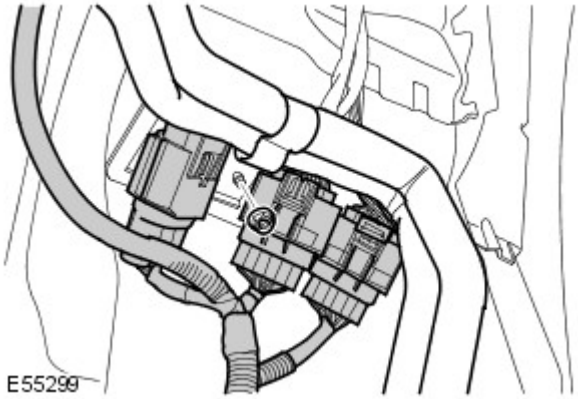

32. LH side: Release the 3 body panel ground cables.

- Remove the nut.

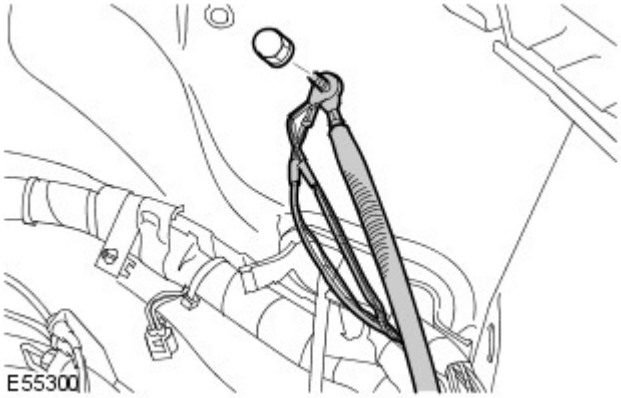

33. LH side: Release the 2 air suspension pipes from the wiring harness.

- Release the 7 clips.

34. LH side: Disconnect the ABS electrical connector.

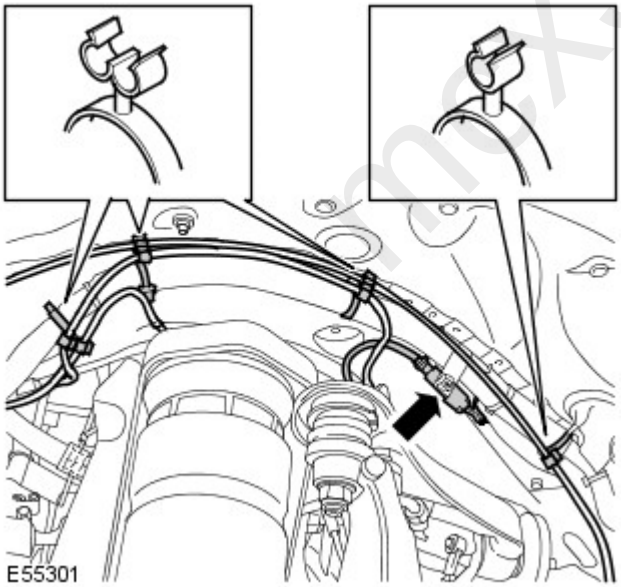

mgx30.com

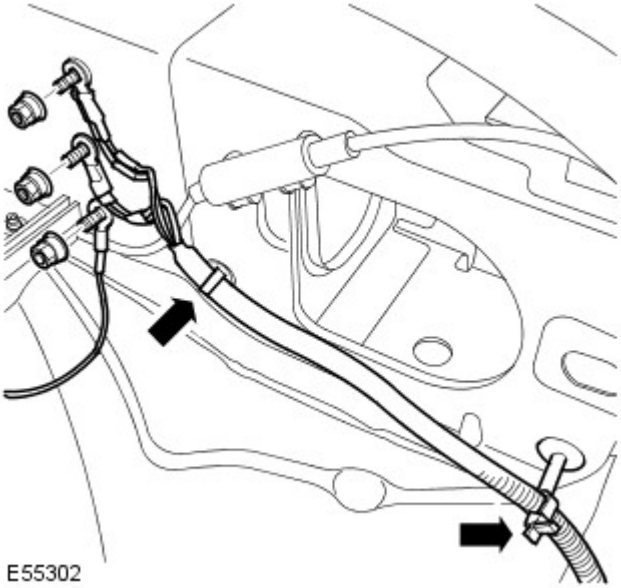

35. LH side: Release 3 engine compartment ground cables.

- Remove the 3 nuts.
- Release the 2 clips.

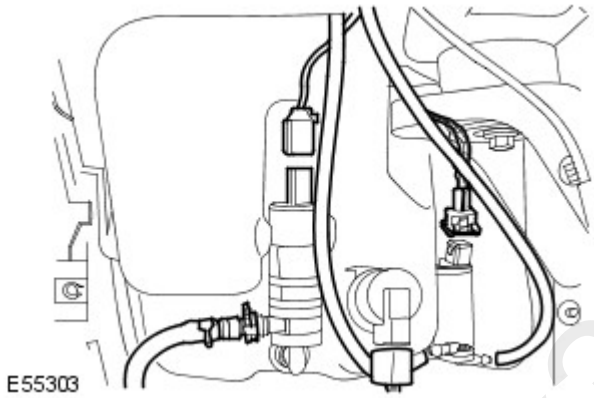

36. LH side: Release the washer reservoir wiring harness.

- Disconnect the 3 electrical connectors.
- Disconnect the 2 washer jet hoses.

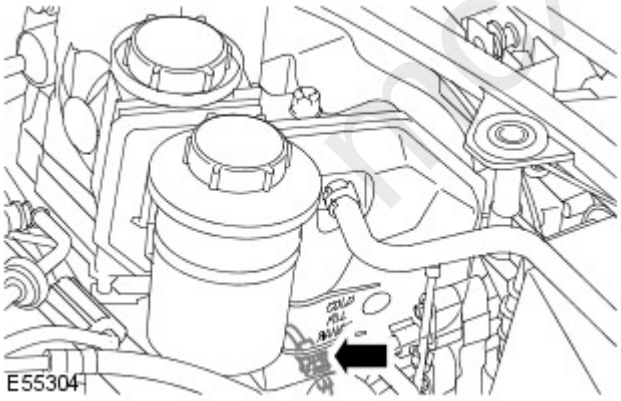

37. LH side: Disconnect the coolant expansion tank level switch electrical connector.

38. LH side: Disconnect the brake pad wear sensor electrical connector.

mdx30.com

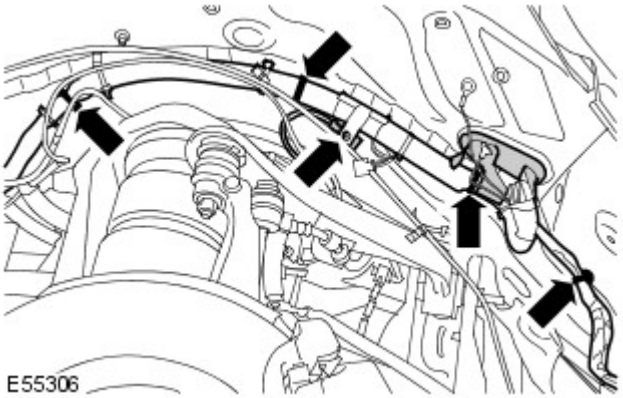

39. LH side: Release the wiring harness.

- Release the grommet.
- Release the 4 clips.

40. Remove the windshield wiper motor.
For additional information, refer to: Windshield Wiper Motor (501-16 Wipers and Washers, Removal and Installation).

41. Remove the hood pad.

- Remove the 11 clips.

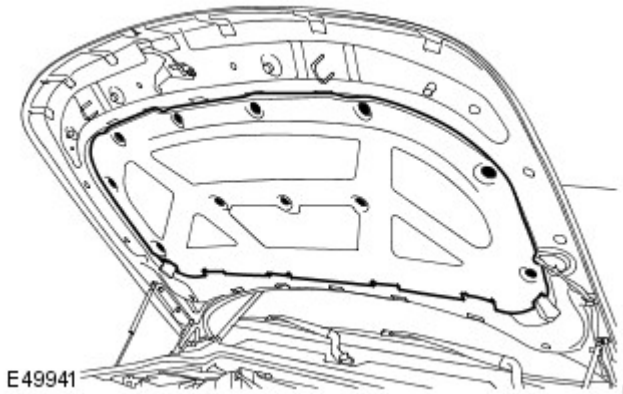

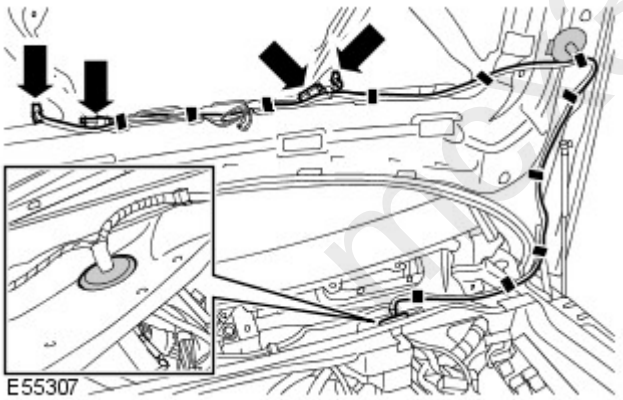

42. Release the hood wiring harness.

- Disconnect the 2 washer jet hoses.
- Disconnect the 2 electrical connectors.
- Release the 10 clips.
- Remove the wiring harness cover.
- Release the grommet.

43. NOTE: 4.0L illustration shown, 2.7L Diesel is similar.

Disconnect the A/C pressure transducer electrical connector.

44. NOTE: 4.0L illustration shown, 2.7L Diesel is similar.

Disconnect the battery to engine compartment wiring harness electrical connector.

45. NOTE: 4.0L illustration shown, 2.7L Diesel is similar.

Release the wiring harness from the plenum.

- Release the 2 clips.
- Remove the 3 nuts.

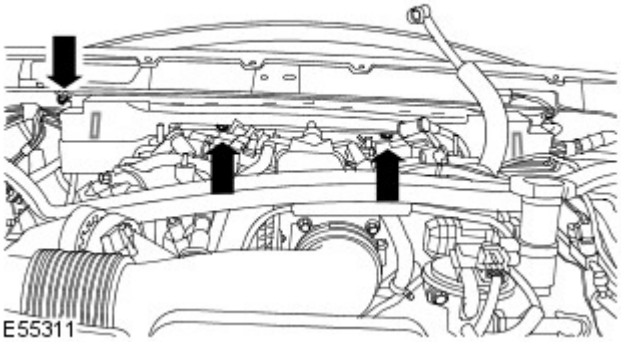

46. Disconnect the brake fluid reservoir electrical connector.

47. Disconnect the ABS module electrical connector.

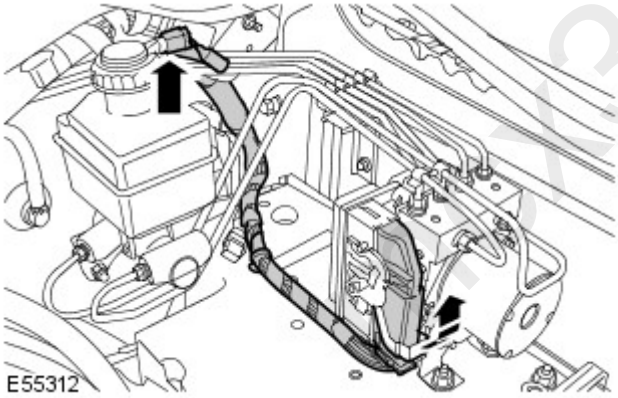

48. Remove the air suspension control module.
For additional information, refer to: Air Suspension Control Module (204-05 Vehicle Dynamic Suspension, Removal and Installation).

49. Driver side: Disconnect 2 electrical connectors from the lower A-pillar.

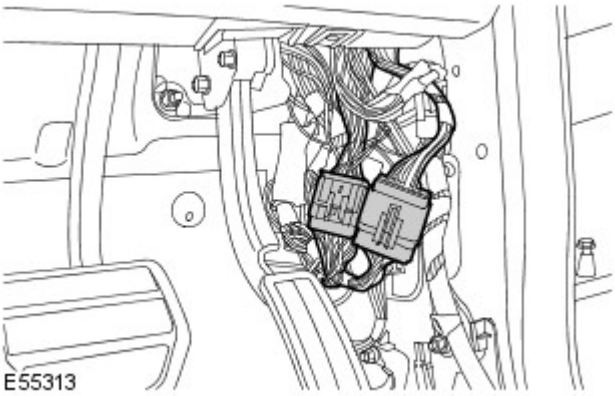

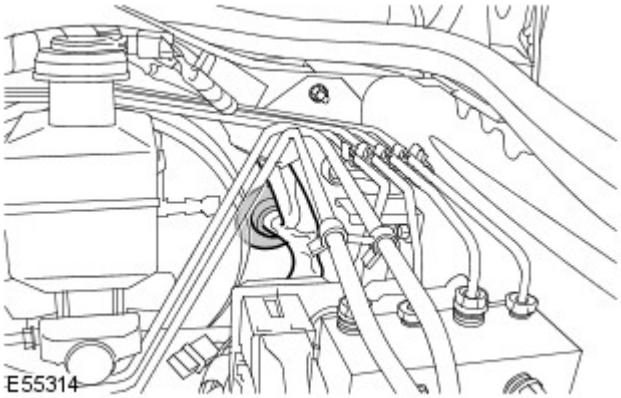

50. Driver side: Release the wiring harness from the bulkhead.

- Release the grommet.

Vehicles with auxiliary heating

51. RH side: Release the heater pipes from the body panel.

- Remove the nut.

All vehicles

52. RH side: Disconnect the 3 body panel electrical connectors.

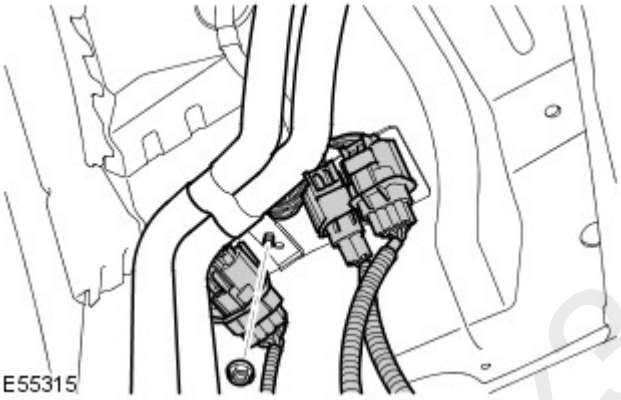

53. RH side: Release the 3 body panel ground cables.

- Remove the nut.

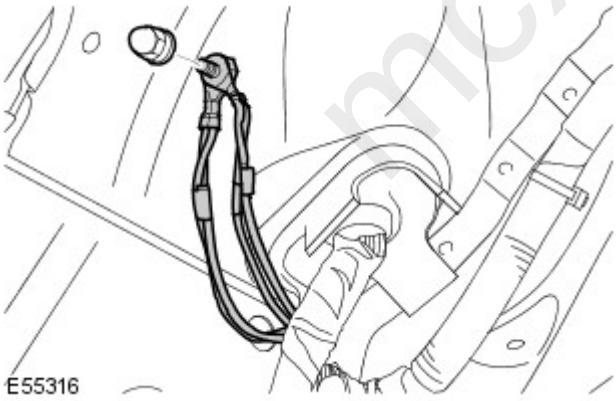

54. RH side: Disconnect the ABS electrical connector.

mcx30.com

55. RH side: Release the air suspension pipe from the wiring harness clip.

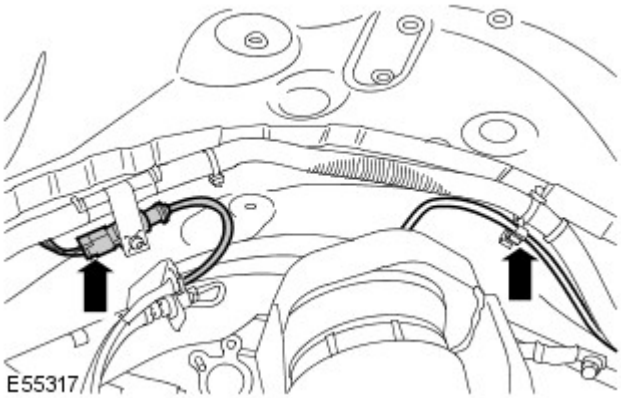

56. RH side: Release 2 engine compartment ground cables.

- Remove the 2 nuts.

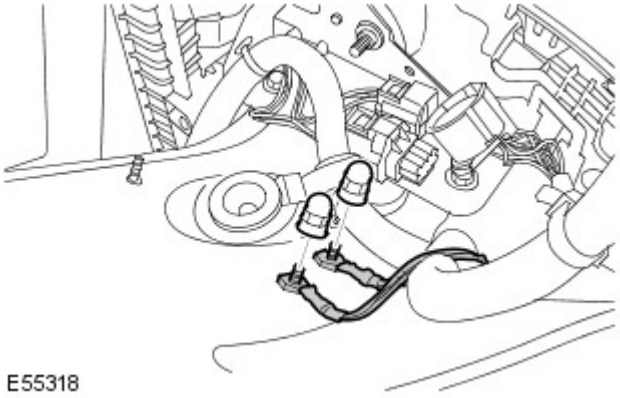

57. Disconnect the ambient air temperature sensor electrical connector.

58. Disconnect both front impact severity sensor electrical connectors.

- Release the 3 clips.

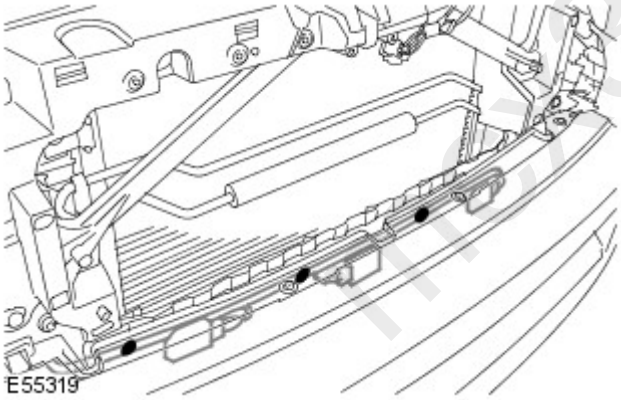

59. RH side: Release the wiring harness.

- Release the 9 clips.

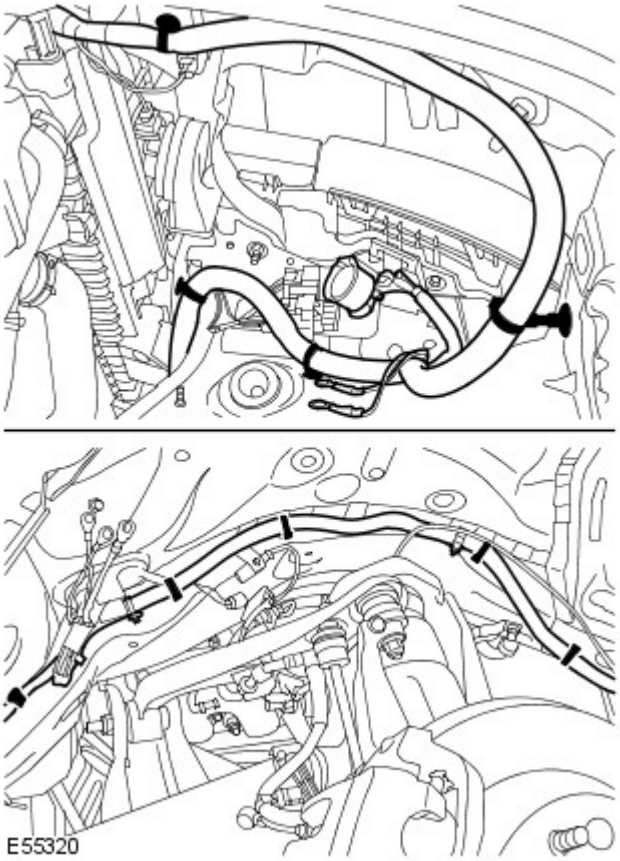

60. Disconnect the hood switch electrical connector.

61. Disconnect both horn electrical connectors.

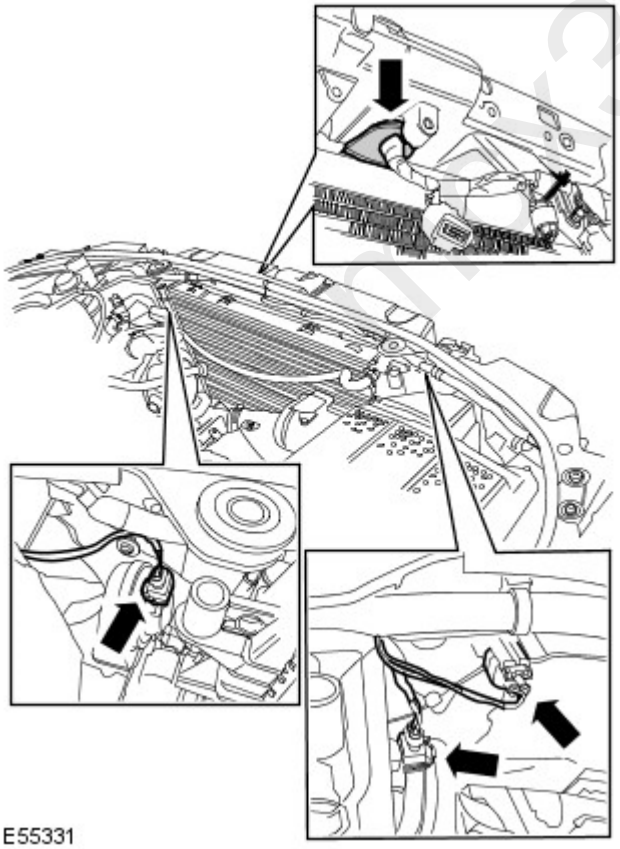

62. If installed, disconnect the speed control module electrical connector.

63. If installed, disconnect the pollution sensor electrical connector.

- Release the clip.
- Release the grommet.

64. NOTE: 4.0L illustration shown, 2.7L Diesel is similar.

Release the hood release cable.

- Release from the 3 clips.

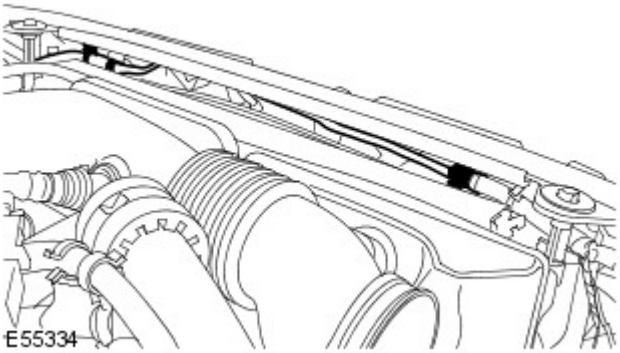

65. Disconnect the front bumper wiring harness electrical connector.

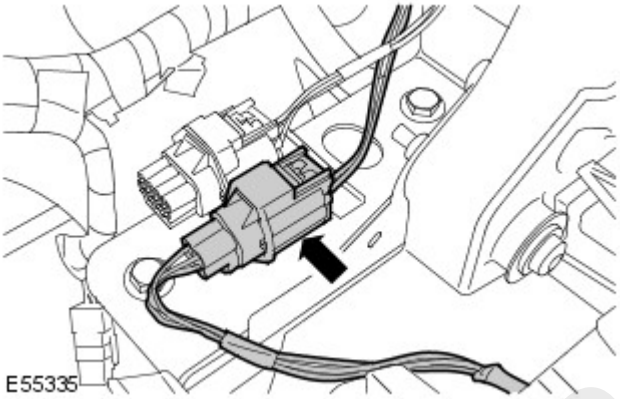

66. With assistance, remove the BJB and wiring harness.

Installation

All vehicles

1. With assistance, install the BJB and wiring harness.

2. Connect the front bumper wiring harness electrical connector.

3. Attach the hood release cable.

- Secure with the clips.

4. If installed, connect the pollution sensor electrical connector.

- Install the grommet.
- Secure the clip.

5. If installed, connect the speed control module electrical connector.

6. Connect the horn electrical connectors.

7. Connect the hood switch electrical connector.

8. RH side: Secure the wiring harness.

- Secure the clips.

9. Connect both front impact electrical connectors.

- Secure the clips.

10. RH side: Attach the air suspension pipe.

11. Connect the ambient air temperature sensor electrical connector.

12. RH side: Attach the engine compartment ground cables.

mcx30.com

- Tighten the nuts to 25 Nm (18 lb.ft).

13. RH side: Connect the ABS electrical connector.

14. RH side: Attach the body panel ground cables.

- Tighten the nut to 25 Nm (18 lb.ft).

15. RH side: Connect the body panel electrical connectors.

Vehicles with auxiliary heating

16. RH side: Secure the heater pipes to the body panel.

- Tighten the nut to 10 Nm (7 lb.ft).

All vehicles

17. Driver side: Attach the wiring harness to the bulkhead.

- Install the grommet.

18. Driver side: Connect the lower A-pillar electrical connectors.

19. Install the air suspension control module.
For additional information, refer to: Air Suspension Control Module (204-05 Vehicle Dynamic Suspension, Removal and Installation).

20. Connect the ABS module electrical connector.

21. Connect the brake fluid reservoir electrical connector.

22. Attach the wiring harness to the plenum.

- Secure the clips.
- Tighten the nuts to 4 Nm (3 lb.ft).

23. Connect the battery to engine compartment wiring harness electrical connector.

24. Connect the A/C pressure transducer electrical connector.

25. Attach the hood wiring harness.

- Install the grommet.
- Install the cover.
- Secure with the clips.
- Connect the electrical connectors.
- Connect the washer jet hoses.

26. Install the hood pad.

- Install the clips.

27. Install the windshield wiper motor.
For additional information, refer to: Windshield Wiper Motor (501-16 Wipers and Washers, Removal and Installation).

28. LH side: Attach the wiring harness.

- Install the grommet.
- Secure the clips.

29. LH side: Connect the brake pad wear sensor electrical connector.

30. LH side: Connect the coolant expansion tank level switch electrical connector.

31. LH side: Attach the washer reservoir wiring harness.

- Connect the washer jet hoses.
- Connect the electrical connectors.

32. LH side: Attach the engine compartment ground cables.

33. LH side: Connect the ABS electrical connector.

34. LH side: Attach the air suspension pipes.

35. LH side: Attach the body panel ground cables.

- Tighten the nuts to 25 Nm (18 lb.ft).

mcx30.com

- Tighten the nut to 25 Nm (18 lb.ft).

36. LH side: Connect the body panel electrical connectors.

Vehicles with auxiliary climate control

37. LH side: Secure the A/C lines to the body panel.

- Tighten the nut to 10 Nm (7 lb.ft).

All vehicles

38. LH side: Connect the adaptive front lighting control module electrical connector.

39. LH side: Connect the washer jet hose.

40. LH side: Attach the wiring harness to the fuel fired heater.

- Connect the electrical connectors.
- Secure with the clips.

41. Passenger side: Connect the transfer case electrical connector.

42. Passenger side: Connect the engine wiring harness electrical connector.

43. Install the headlamps.
For additional information, refer to: Headlamp Assembly (417-01 Exterior Lighting, Removal and Installation).

44. Install the fender splash shields.
For additional information, refer to: Fender Splash Shield (501-02 Front End Body Panels, Removal and Installation).

45. Attach the BJB wiring harness to the bulkhead.

- Connect the electrical connectors.
- Install the grommet.

46. Install the battery ground cable.

- Attach the additional ground cable.
- Tighten the nut to 25 Nm (18 lb.ft).

47. Secure the BJB to the bracket.

- Tighten the bolt to 6 Nm (4 lb.ft).

48. Connect the heater motor electrical connector.

49. Connect the ground cables to the lower A-pillar.

- Tighten the nut to 10 Nm (7 lb.ft).

50. Install the CJB bracket.

- Tighten the nuts to 10 Nm (7 lb.ft).
- Secure the clips.
- Connect the electrical connectors.
- Tighten the bolts to 25 Nm (18 lb.ft).

51. Install the CJB.
For additional information, refer to: Central Junction Box (CJB) (418-00 Module Communications Network, Removal and Installation).

52. Connect the battery positive cable to the BJB.

- Tighten the nut to 25 Nm (18 lb.ft).

53. Install the BJB cover.

- Secure the clip.

54. Install the ECM.

55. Install the ECM cover.

- Install the ECM top cover.
- Tighten the Torx screws.

mcx30.com

- Connect the electrical connectors.

56. Install the auxiliary battery tray.
For additional information, refer to: Auxiliary Battery Tray (414-01 Battery, Mounting and Cables, Removal and Installation).

57. Install the battery tray.
For additional information, refer to: Battery Tray (414-01 Battery, Mounting and Cables, Removal and Installation).

58. Install the four-wheel drive control module.
For additional information, refer to: Four-Wheel Drive (4WD) Control Module (308-07A Four-Wheel Drive Systems, Removal and Installation).

59. Install the air cleaner assembly.
For additional information, refer to: Air Cleaner (303-12A Intake Air Distribution and Filtering - TDV6 2.7L Diesel, Removal and Installation).

60. Install the radiator grille.
For additional information, refer to: Radiator Grille (501-08 Exterior Trim and Ornamentation, Removal and Installation).

61. Install the engine cover.
For additional information, refer to: Engine Cover - TDV6 3.0L Diesel (501-05 Interior Trim and Ornamentation, Removal and Installation).

62. Connect the battery ground cable.
For additional information, refer to: Specifications (414-00 Battery and Charging System - General Information, Specifications).

63. Check the headlamp beam alignment.
For additional information, refer to: Headlamp Adjustment (417-01 Exterior Lighting, General Procedures).

mcx30.com

Published: 11-May-2011

Module Communications Network - Battery Junction Box (BJB)TDV6 3.0L Diesel

Removal and Installation

Removal

- NOTE: The BJB is an integral component of the engine compartment wiring harness and cannot be removed separately.

1. Disconnect the battery ground cable.
For additional information, refer to: Specifications (414-00 Battery and Charging System - General Information, Specifications).

2. Make the SRS system safe.
For additional information, refer to: Standard Workshop Practices (100-00 General Information, Description and Operation).

3. Remove the engine cover.
For additional information, refer to: Engine Cover - 2.7L V6 - TdV6 (501-05 Interior Trim and Ornamentation, Removal and Installation).

4. Remove the radiator grille.
For additional information, refer to: Radiator Grille (501-08 Exterior Trim and Ornamentation, Removal and Installation).

5. Remove the air cleaner assembly.

6. Remove the four-wheel drive control module.
For additional information, refer to: Four-Wheel Drive (4WD) Control Module (308-07 Four-Wheel Drive Systems, Removal and Installation).

7. Remove the battery tray.
For additional information, refer to: Battery Tray (414-01 Battery, Mounting and Cables, Removal and Installation).

8. Remove the auxiliary battery tray.
For additional information, refer to: Auxiliary Battery Tray (414-01 Battery, Mounting and Cables, Removal and Installation).

9. Remove the ECM cover.

- Disconnect 2 electrical connectors for access.
- Disconnect the 2 ECM electrical connectors.
- Remove the 4 Torx screws.

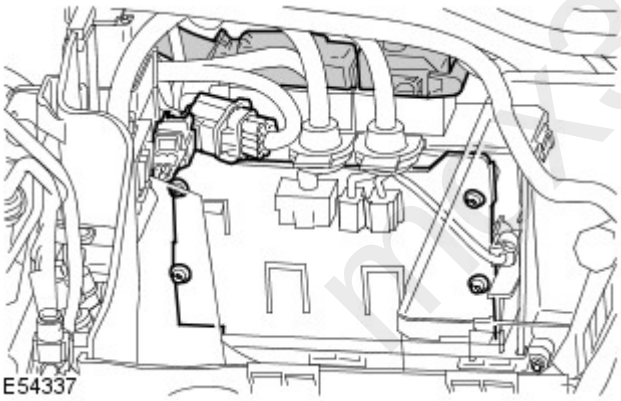

10. Remove the ECM.

- Remove the ECM top cover.

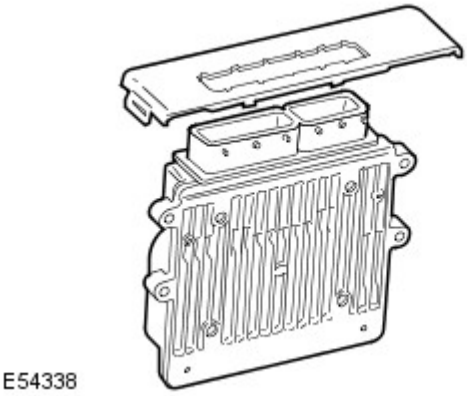

11. Remove the BJB cover.

- Release the clip.

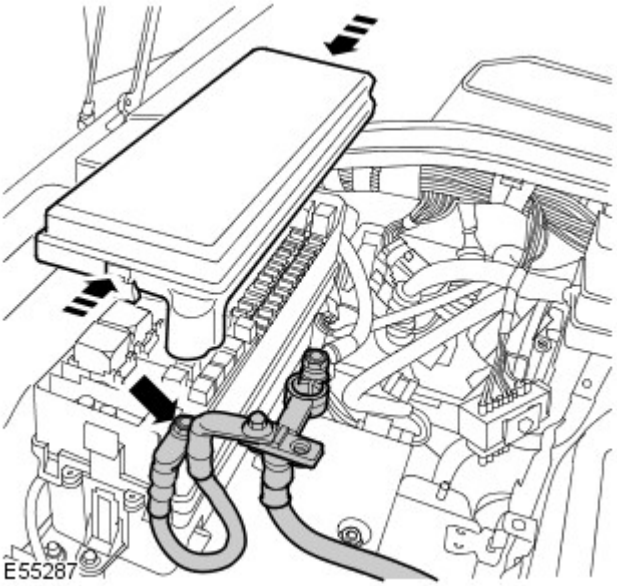

12. Disconnect the battery positive cable from the BJB.

- Remove the nut.

13. Remove both cowl side trim panels.
For additional information, refer to: Cowl Side Trim Panel (501-05 Interior Trim and Ornamentation, Removal and Installation).

14. Remove the CJB.
For additional information, refer to: Central Junction Box (CJB) (418-00 Module Communications Network, Removal and Installation).

15. Release the CJB bracket.

- Release the 3 upper wiring harness clips.
- Remove the 2 bolts.

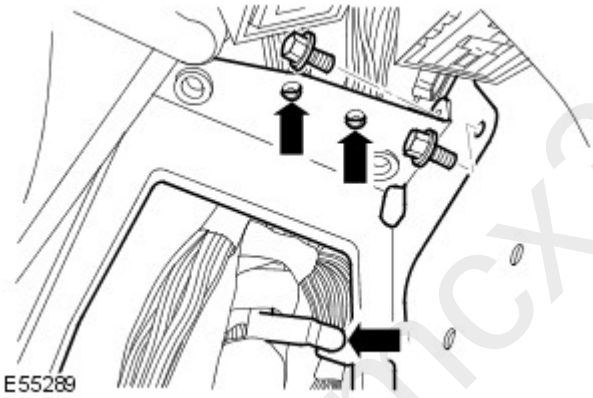

16. Remove the CJB bracket.

- Disconnect the 2 electrical connectors.
- Release the 3 lower wiring harness clips.
- Remove the 2 nuts.

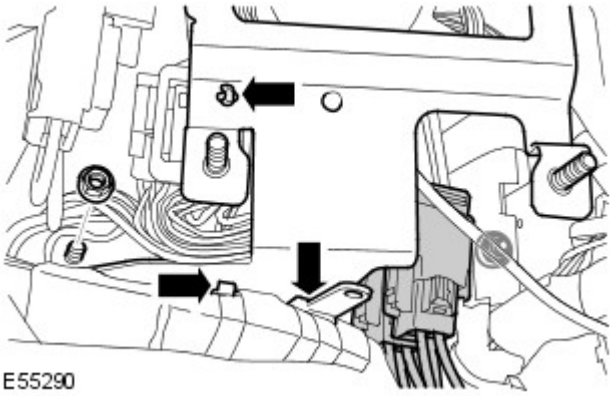

mcx30.com

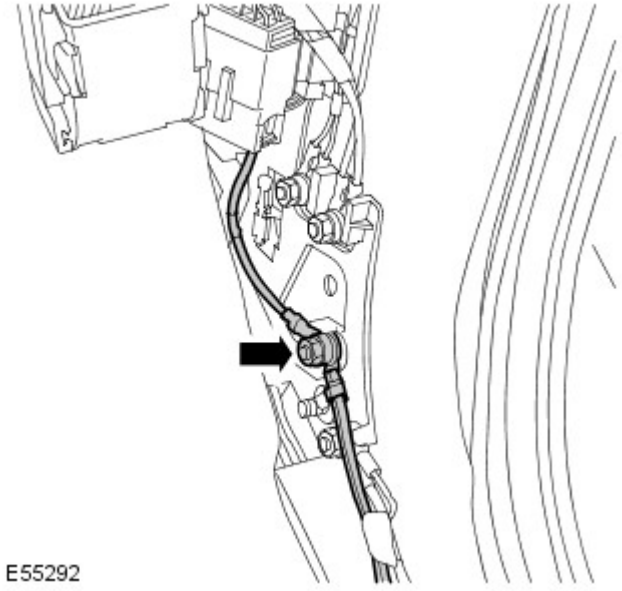

17. Release the 2 ground cables from the lower A-pillar.

- Remove the nut.

18. Disconnect the heater motor electrical connector.

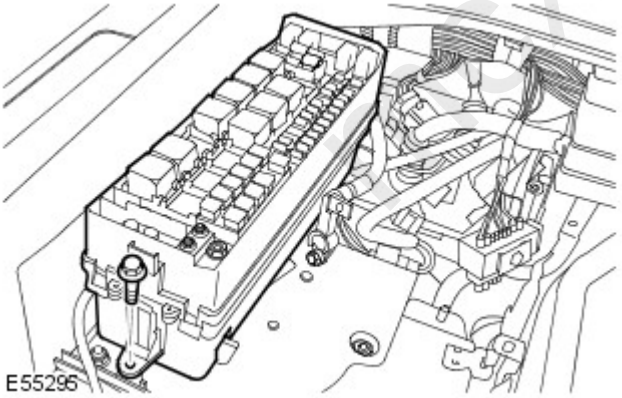

19. Release the BJB from the bracket.

- Remove the bolt.

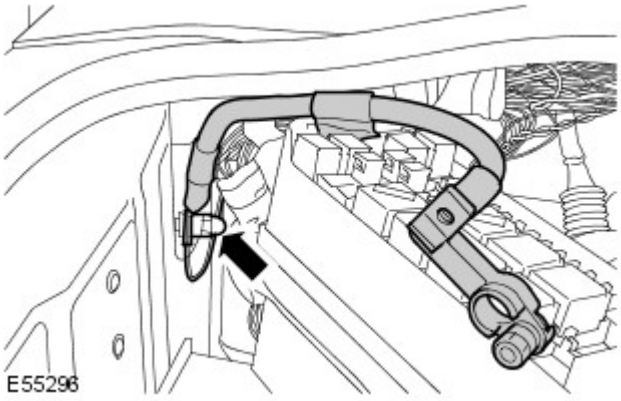

20. Remove the battery ground cable.

- Remove the nut.
- Release the additional ground cable.

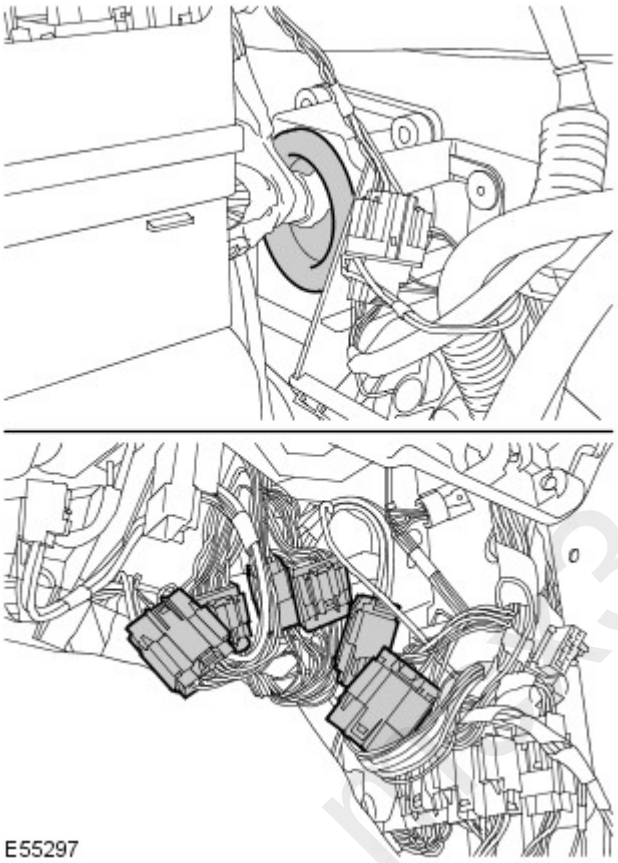

21. Release the BJB wiring harness from the bulkhead.

- Disconnect the 6 electrical connectors.
- Release the grommet.

22. Raise and support the vehicle.

23. Remove both front fender splash shields.
For additional information, refer to: Fender Splash Shield (501-02 Front End Body Panels, Removal and Installation).

24. Remove both headlamps.
For additional information, refer to: Headlamp Assembly (417-01 Exterior Lighting, Removal and Installation).

25. Passenger side: Disconnect the engine wiring harness electrical connector.

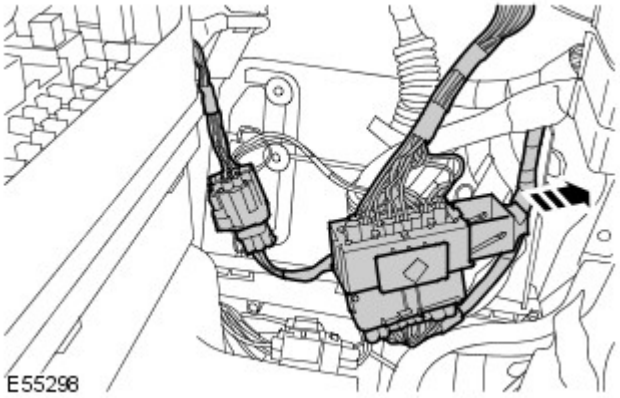

26. Passenger side: Disconnect the transfer case electrical connector.

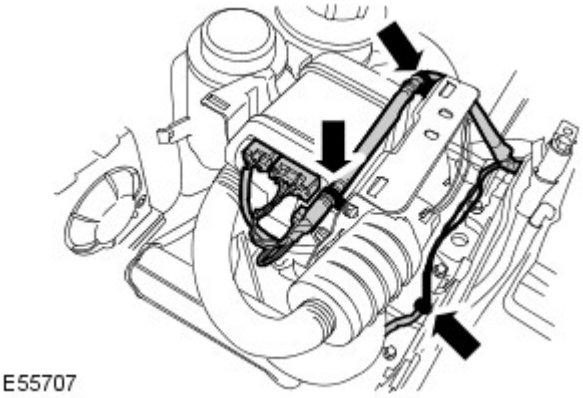

27. LH side: Release the wiring harness from the fuel fired heater.

- Disconnect the 3 electrical connectors.
- Release the 3 clips.

28. LH side: Disconnect the washer jet hose.

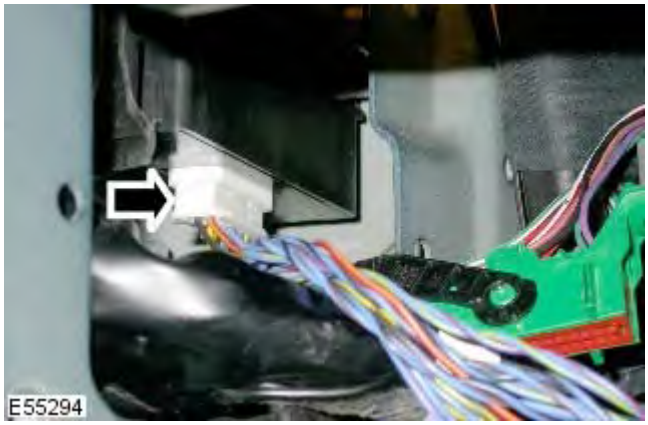

29. LH side: Disconnect the adaptive front lighting module electrical connector.

mcx30.com

30. LH side: Disconnect the 3 body panel electrical connectors.

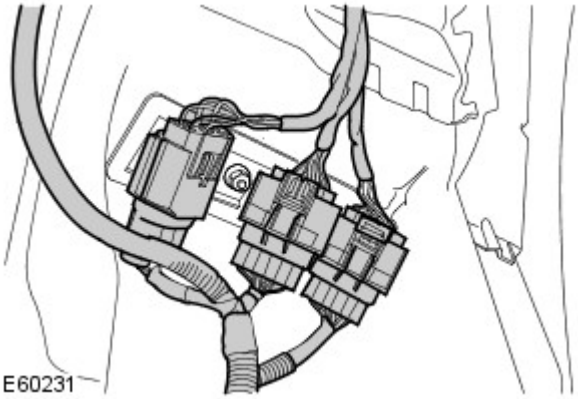

31. LH side: Release the 3 body panel ground cables.

- Remove the nut.

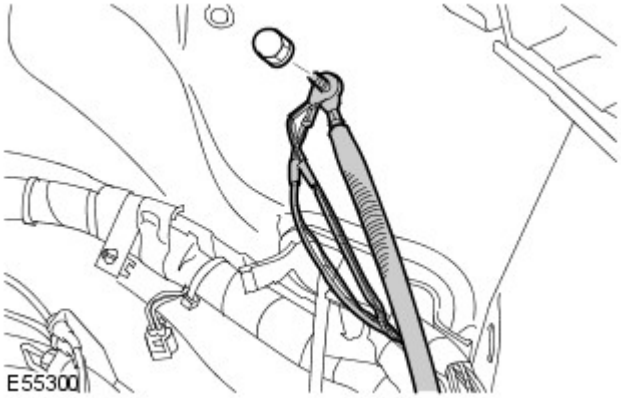

32. LH side: Release the 2 air suspension pipes from the wiring harness.

- Release the 7 clips.

33. LH side: Disconnect the ABS electrical connector.

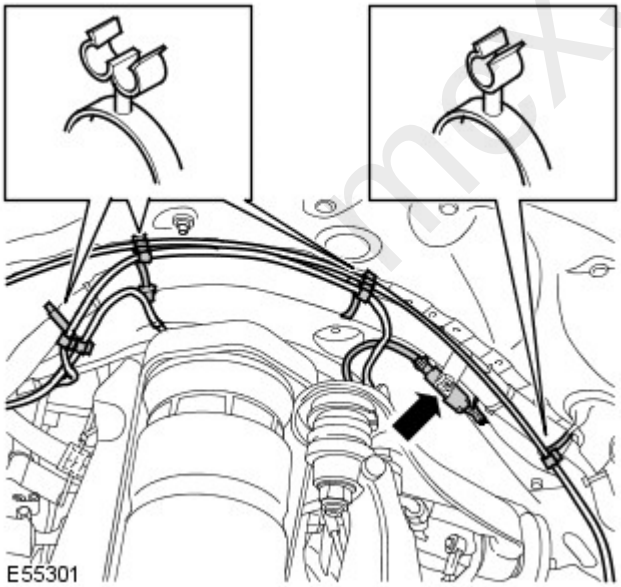

mgx30.com

34. LH side: Release 3 engine compartment ground cables.

- Remove the 3 nuts.
- Release the 2 clips.

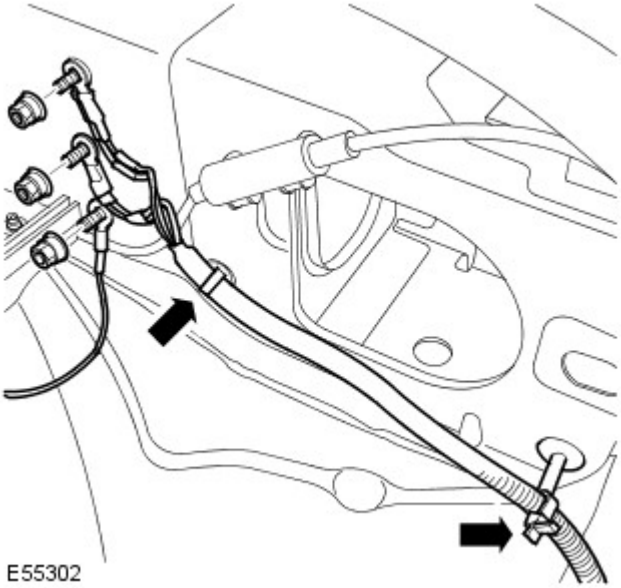

35. LH side: Release the washer reservoir wiring harness.

- Disconnect the 3 electrical connectors.
- Disconnect the 2 washer jet hoses.

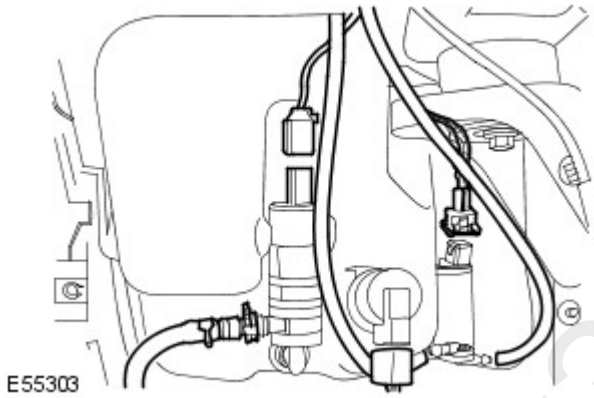

36. LH side: Disconnect the coolant expansion tank level switch electrical connector.

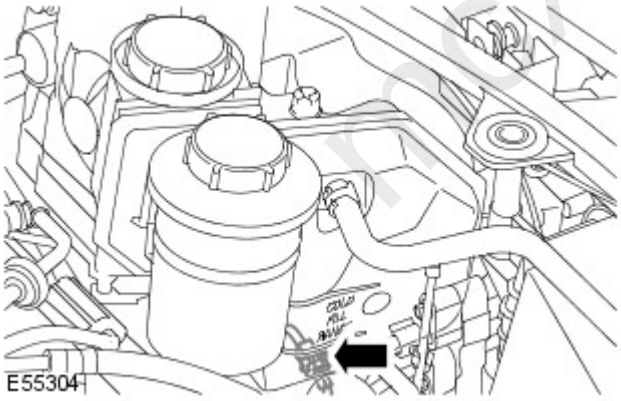

37. LH side: Disconnect the brake pad wear sensor electrical connector.

mdx30.com

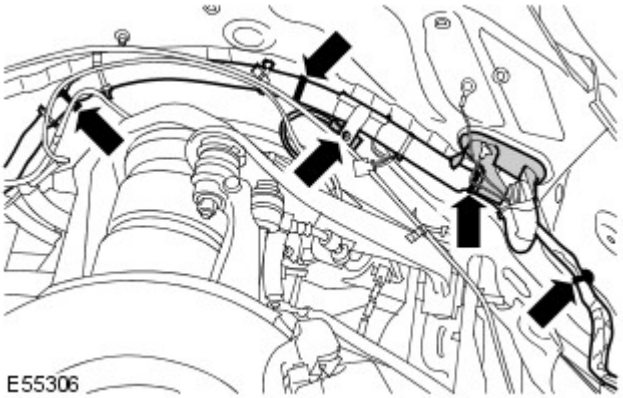

38. LH side: Release the wiring harness.

- Release the grommet.
- Release the 4 clips.

39. Remove the windshield wiper motor.
For additional information, refer to: Windshield Wiper Motor (501-16 Wipers and Washers, Removal and Installation).

40. Remove the hood pad.

- Remove the 11 clips.

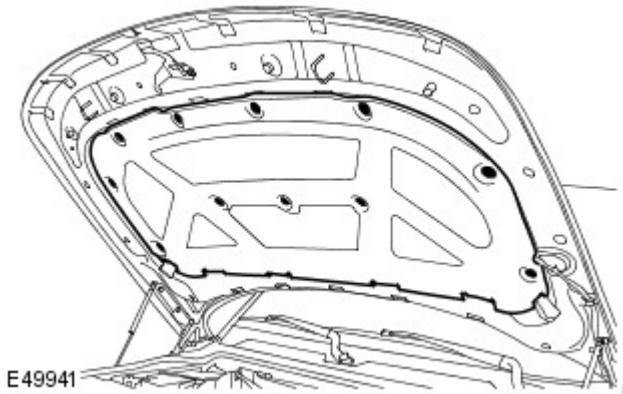

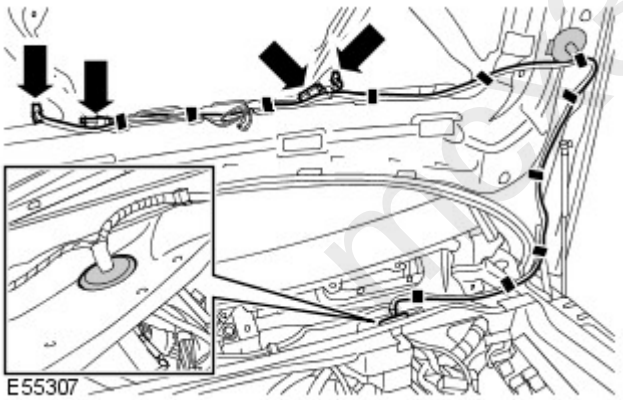

41. Release the hood wiring harness.

- Disconnect the 2 washer jet hoses.
- Disconnect the 2 electrical connectors.
- Release the 10 clips.
- Remove the wiring harness cover.
- Release the grommet.

42. Disconnect the A/C pressure transducer electrical connector.

43. NOTE: 4.0L illustration shown, 2.7L Diesel is similar.

Disconnect the battery to engine compartment wiring harness electrical connector.

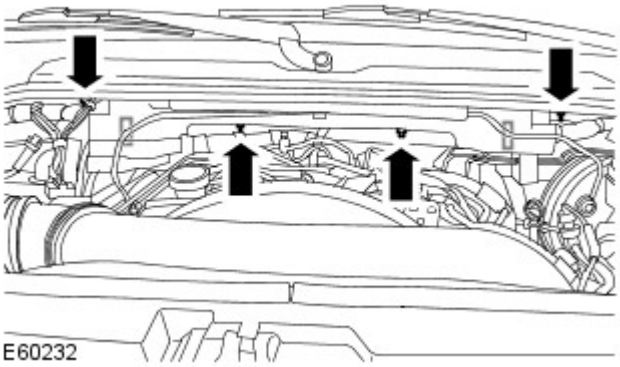

44. Release the wiring harness from the plenum.

- Remove the 3 nuts.
- Release the clip.

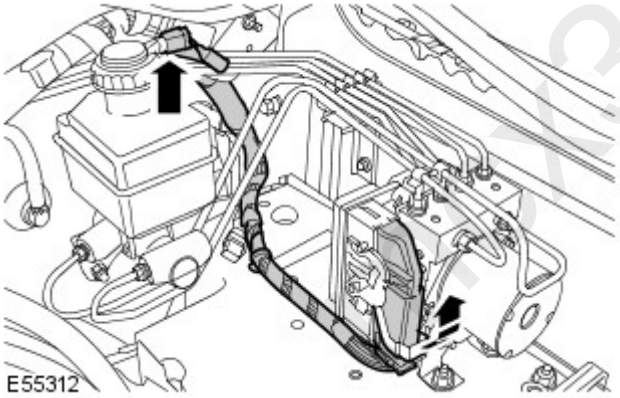

45. Disconnect the brake fluid reservoir electrical connector.

46. Disconnect the ABS module electrical connector.

47. Remove the air suspension control module.
For additional information, refer to: Air Suspension Control Module (204-05 Vehicle Dynamic Suspension, Removal and Installation).

48. Driver side: Disconnect 2 electrical connectors from the lower A-pillar.

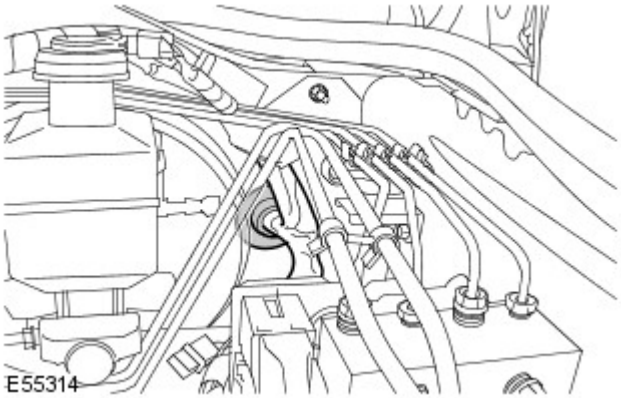

49. Driver side: Release the wiring harness from the bulkhead.

- Release the grommet.

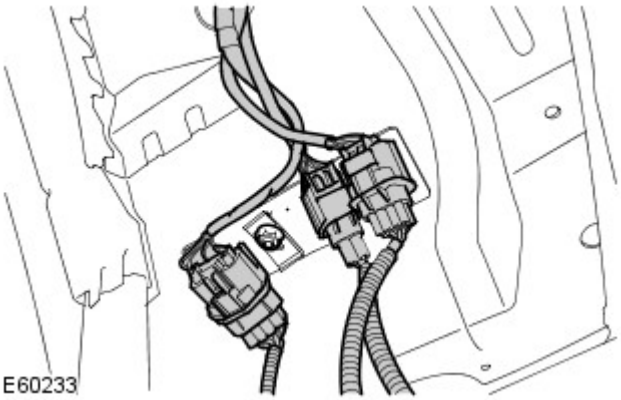

50. RH side: Disconnect the 3 body panel electrical connectors.

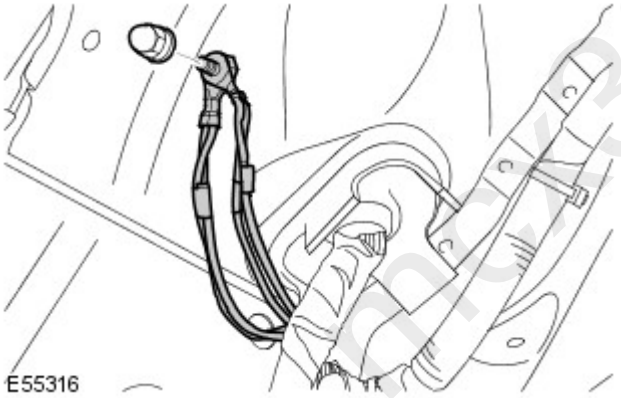

51. RH side: Release the 3 body panel ground cables.

- Remove the nut.

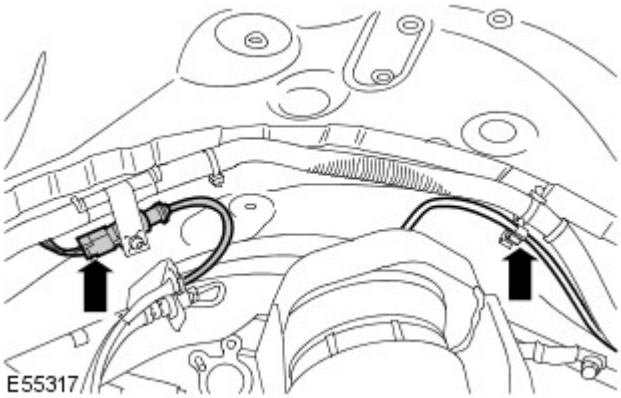

52. RH side: Disconnect the ABS electrical connector.

53. RH side front: Release the air suspension pipe from the wiring harness clip.

mgx30.com

54. RH side: Release 2 engine compartment ground cables.

- Remove the 2 nuts.

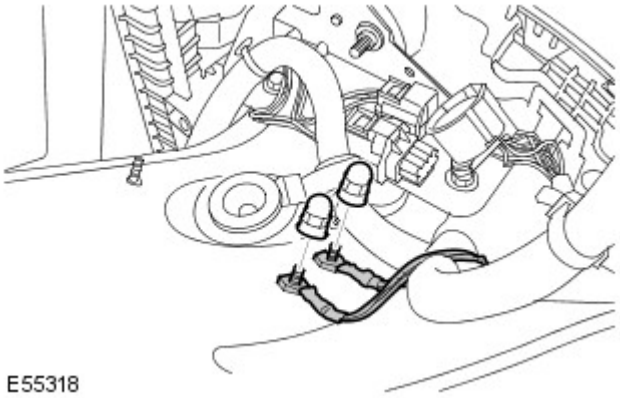

55. Disconnect the ambient air temperature sensor electrical connector.

56. Disconnect both front impact severity sensor electrical connectors.

- Release the 3 clips.

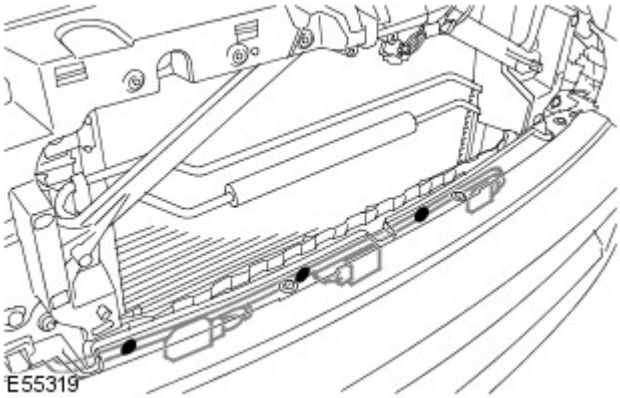

57. RH side: Release the wiring harness.

- Release the 9 clips.

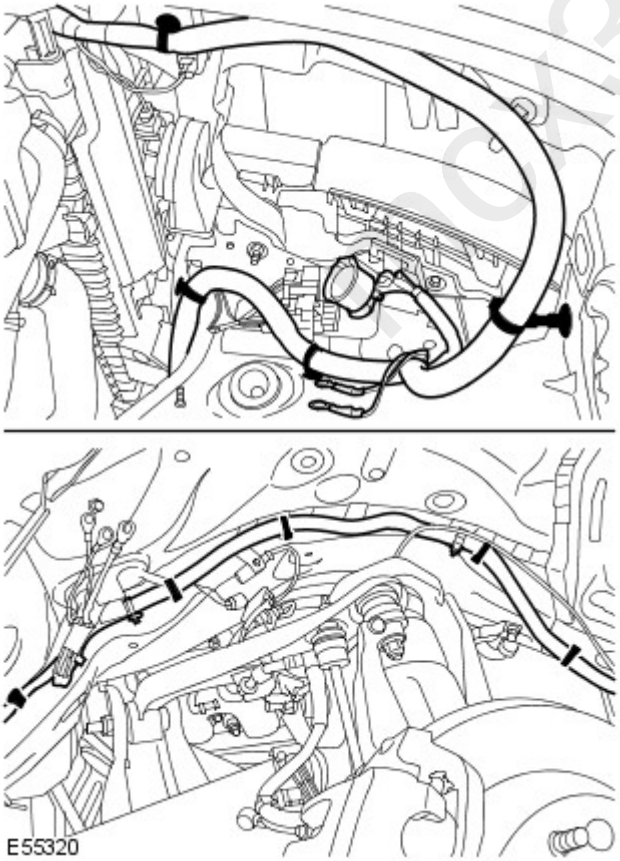

58. Disconnect the hood switch electrical connector.

mex30.com

59. Disconnect both horn electrical connectors.

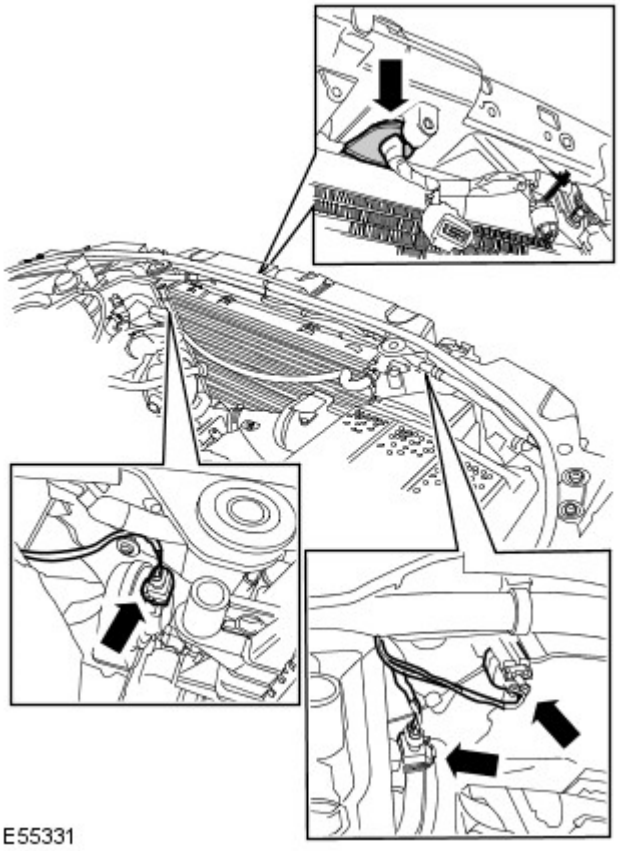

60. If installed, disconnect the speed control module electrical connector.

61. If installed, disconnect the pollution sensor electrical connector.

- Release the clip.
- Release the grommet.

62. NOTE: 4.0L illustration shown, 2.7L Diesel is similar.

Release the hood release cable.

- Release from the 3 clips.

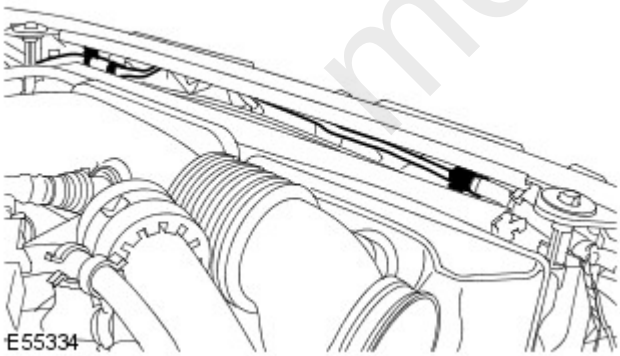

mcx30.com

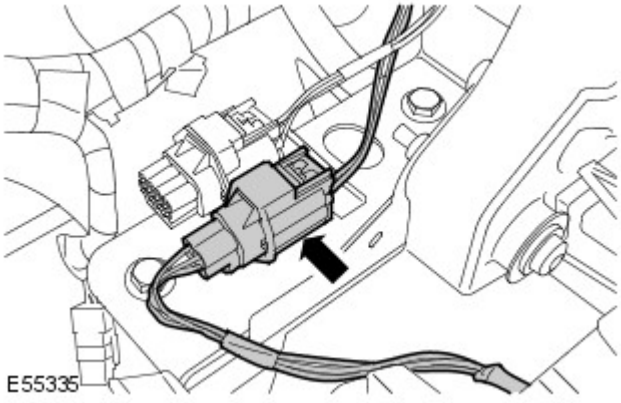

63. Disconnect the front bumper wiring harness electrical connector.

64. With assistance, remove the BJB and wiring harness.

Installation

1. With assistance, install the BJB and wiring harness.

2. Connect the front bumper wiring harness electrical connector.

3. Attach the hood release cable.

- Secure with the clips.

4. If installed, connect the pollution sensor electrical connector.

- Install the grommet.
- Secure the clip.

5. If installed, connect the speed control module electrical connector.

6. Connect the horn electrical connectors.

7. Connect the hood switch electrical connector.

8. RH side: Secure the wiring harness.

- Secure the clips.

9. Connect both front impact electrical connectors.

- Secure the clips.

10. RH side: Attach the air suspension pipe.

11. Connect the ambient air temperature sensor electrical connector.

12. RH side: Attach the engine compartment ground cables.

- Tighten the nuts to 25 Nm (18 lb.ft).

13. RH side: Connect the ABS electrical connector.

14. RH side: Attach the body panel ground cables.

- Tighten the nut to 25 Nm (18 lb.ft).

15. RH side: Connect the body panel electrical connectors.

16. Driver side: Attach the wiring harness to the bulkhead.

- Install the grommet.

17. Driver side: Connect the lower A-pillar electrical connectors.

18. Install the air suspension control module.
For additional information, refer to: Air Suspension Control Module (204-05 Vehicle Dynamic Suspension, Removal and Installation).

19. Connect the ABS module electrical connector.

20. Connect the brake fluid reservoir electrical connector.

21. Attach the wiring harness to the plenum.

22. Connect the battery to engine compartment wiring harness electrical connector.

- Secure the clips.

23. Connect the A/C pressure transducer electrical connector.

- Tighten the nuts to 4 Nm (3 lb.ft).

mcx30.com

24. Attach the hood wiring harness.

- Install the grommet.
- Install the cover.
- Secure with the clips.
- Connect the electrical connectors.
- Connect the washer jet hoses.

25. Install the hood pad.

- Install the clips.

26. Install the windshield wiper motor.
For additional information, refer to: Windshield Wiper Motor (501-16 Wipers and Washers, Removal and Installation).

27. LH side: Attach the wiring harness.

- Install the grommet.
- Secure the clips.

28. LH side: Connect the brake pad wear sensor electrical connector.

29. LH side: Connect the coolant expansion tank level switch electrical connector.

30. LH side: Attach the washer reservoir wiring harness.

- Connect the washer jet hoses.
- Connect the electrical connectors.

31. LH side: Attach the engine compartment ground cables.

- Secure the clips.
- Tighten the nuts to 25 Nm (18 lb.ft).

32. LH side: Connect the ABS electrical connector.

33. LH side: Attach the air suspension pipes.

- Secure the clips.

34. LH side: Attach the body panel ground cables.

- Tighten the nut to 25 Nm (18 lb.ft).

35. LH side: Connect the body panel electrical connectors.

36. LH side: Connect the adaptive front lighting module electrical connector.

37. LH side: Connect the washer jet hose.

38. LH side: Attach the wiring harness to the fuel fired heater.

- Connect the electrical connectors.
- Secure with the clips.

39. Passenger side: Connect the transfer case electrical connector.

40. Passenger side: Connect the engine wiring harness electrical connector.

41. Install the headlamps.
For additional information, refer to: Headlamp Assembly (417-01 Exterior Lighting, Removal and Installation).

42. Install the fender splash shields.
For additional information, refer to: Fender Splash Shield (501-02 Front End Body Panels, Removal and Installation).

43. Attach the BJB wiring harness to the bulkhead.

- Connect the electrical connectors.
- Install the grommet.

44. Install the battery ground cable.

mcx30.com

- Attach the additional ground cable.
- Tighten the nut to 25 Nm (18 lb.ft).

45. Secure the BJB to the bracket.

- Tighten the bolt to 6 Nm (4 lb.ft).

46. Connect the heater motor electrical connector.

47. Connect the ground cables to the lower A-pillar.

- Tighten the nut to 10 Nm (7 lb.ft).

48. Install the CJB bracket.

- Tighten the nuts to 10 Nm (7 lb.ft).
- Secure the clips.
- Connect the electrical connectors.
- Tighten the bolts to 25 Nm (18 lb.ft).

49. Install the CJB.
For additional information, refer to: Central Junction Box (CJB) (418-00 Module Communications Network, Removal and Installation).

50. Connect the battery positive cable to the BJB.

- Tighten the nut to 25 Nm (18 lb.ft).

51. Install the BJB cover.

- Secure the clip.

52. Install the ECM.

- Install the ECM top cover.

53. Install the ECM cover.

- Tighten the Torx screws.
- Connect the electrical connectors.

54. Install the auxiliary battery tray.
For additional information, refer to: Auxiliary Battery Tray (414-01 Battery, Mounting and Cables, Removal and Installation).

55. Install the battery tray.
For additional information, refer to: Battery Tray (414-01 Battery, Mounting and Cables, Removal and Installation).

56. Install the four-wheel drive control module.
For additional information, refer to: Four-Wheel Drive (4WD) Control Module (308-07 Four-Wheel Drive Systems, Removal and Installation).

57. Install the air cleaner assembly.

58. Install the radiator grille.
For additional information, refer to: Radiator Grille (501-08 Exterior Trim and Ornamentation, Removal and Installation).

59. Install the engine cover.
For additional information, refer to: Engine Cover - 2.7L V6 - TdV6 (501-05 Interior Trim and Ornamentation, Removal and Installation).

60. Connect the battery ground cable.
For additional information, refer to: Specifications (414-00 Battery and Charging System - General Information, Specifications).

mcx30.com

Published: 11-May-2011

Module Communications Network - Central Junction Box (CJB)

Removal and Installation

Removal

1. If the central junction box (CJB) is to be replaced, connect T4 to the vehicle.
2. Remove the glove compartment.
   For additional information, refer to: Glove Compartment (501-12 Instrument Panel and Console, Removal and Installation).
3. Remove the passenger side closing trim panel.
   - Release the clip.
   - Remove the 2 screws.
   - Disconnect the electrical connector.

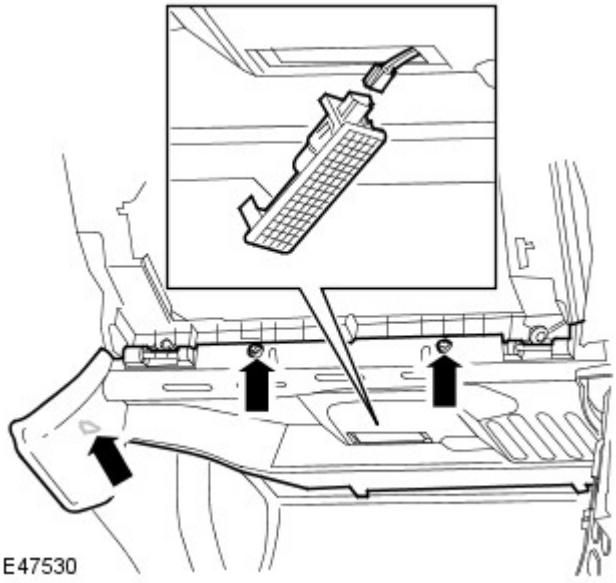

4. Remove the CJB.
   - Remove the 2 nuts.
   - Disconnect the 6 electrical connectors.

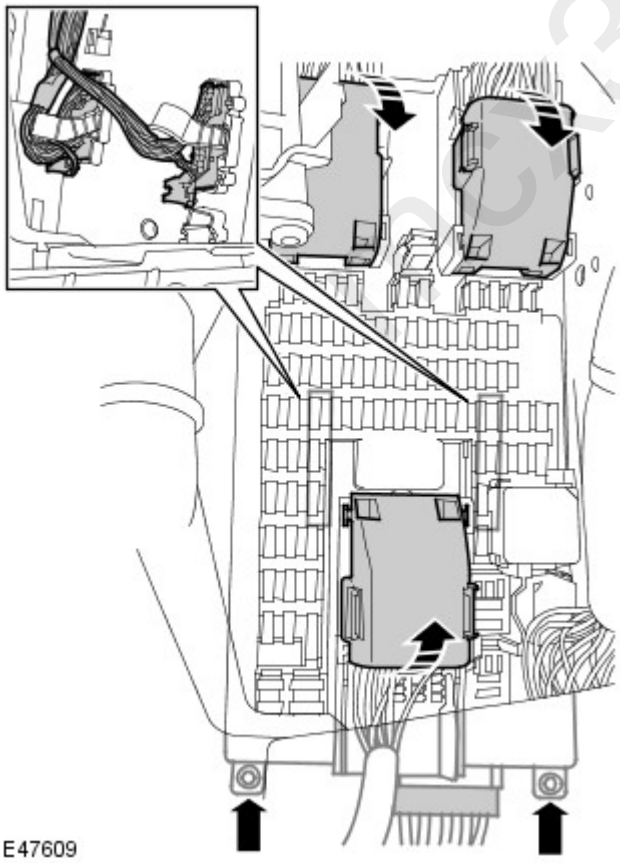

Installation

1. Install the CJB.

- Connect the electrical connectors.
- Tighten the nuts to 10 Nm (7 lb.ft).

2. Install the closing trim panel.

- Connect the electrical connector.
- Secure the clip.

3. Install the glove compartment.
For additional information, refer to: Glove Compartment (501-12 Instrument Panel and Console, Removal and Installation).

4. Initiate a new CJB using T4.

mcx30.com